NBR-BEL-1532089

# NBRESENT PROGRAM
# INSTALL 4" PL (25 PSIG)
# 56 SHAW RD, BELMONT, MA.
# W.O. NO.: 1532089

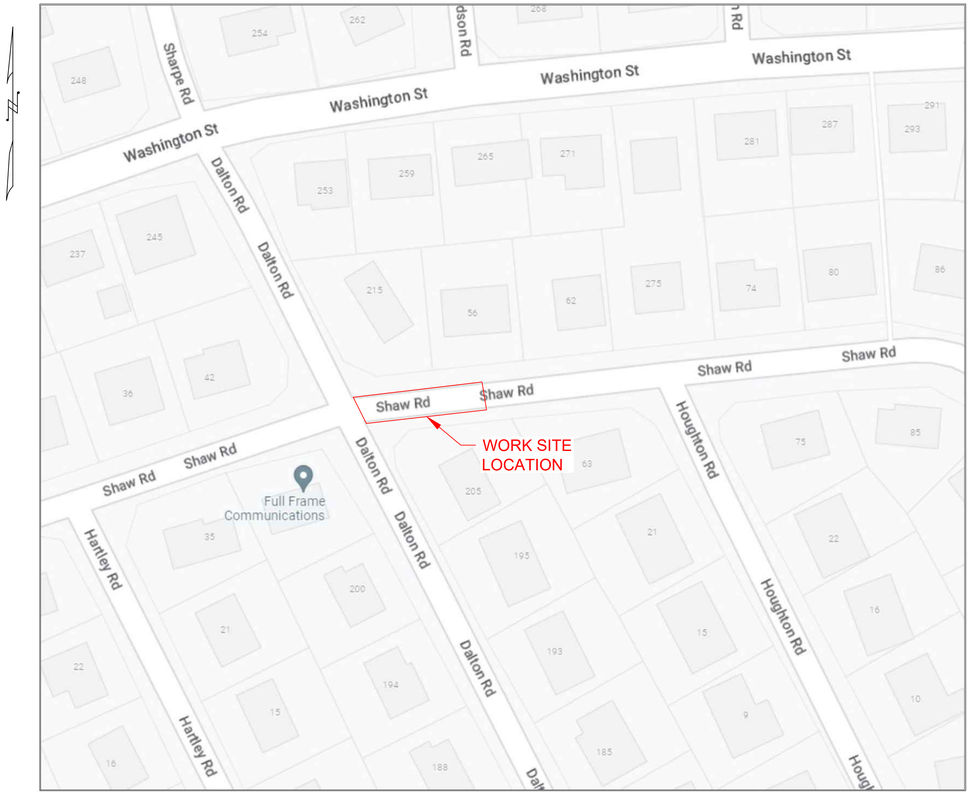


LOCUS
SCALE: NTS

| INDEX OF PAGES | | |
|---|---|---|
| PAGE | DRAWING NO. | TITLE |
| 1 | NBR-BEL-1532089 G-001 | COVER PAGE |
| 2 | NBR-BEL-1532089 G-002 | CONSTRUCTION NOTES AND BILL OF MATERIALS |
| 3 | NBR-BEL-1532089 C-001 | PROPOSED INSTALLATION PLAN |
| 4 | NBR-BEL-1532089 C-101 | PROPOSED MAIN CONNECTION DETAILS |
| 5 | NBR-BEL-1532089 C-102 | PROPOSED TEMPORARY TRAFFIC CONTROL PLAN |
| 6 | NBR-BEL-1532089 C-201 | STANDARD DETAILS |
| 7 | NBR-BEL-1532089 C-202 | STANDARD DETAILS |

| PROJECT SUMMARY TABLE | | | | | |
|---|---|---|---|---|---|
| PROPOSED INSTALLATION | | | PROPOSED ABANDONMENT | | |
| LENGTH (FT) | SIZE (IN) | TYPE | LENGTH (FT) | SIZE (IN) | TYPE |
| 25 | 4 | PL-25# | - | - | - |
| 25 | TOTAL INSTALLATION (FT) | | - | TOTAL ABANDONMENT (FT) | |

811 DigSafe MA·ME·NH·RI·VT

NOTE TO CONTRACTOR:
BEFORE PERFORMING ANY WORK, THE CONTRACTOR SHALL CONTACT THE "DIG NUMBER" (PHONE 800-272-1000). FOR A MARK-OUT OF ALL UNDERGROUND UTILITIES. IT IS THE RESPONSIBILITY OF THE CONTRACTOR TO CONTACT THE "DIG NUMBER" AND TO ASCERTAIN THE LOCATION OF ALL UNDERGROUND CONSTRUCTION IN THE AREA OF THE PROJECT.

THE CONTRACTOR SHALL CONDUCT TEST PITS TO VERIFY THE LOCATIONS OF UNDERGROUND UTILITIES WHERE POTENTIAL CONFLICTS MAY OCCUR OR WHERE DISCREPANCIES ARE PRESENT BETWEEN THE PLAN AND UNDERGROUND UTILITY MARK-OUTS.

THESE TEST PITS SHALL BE IN ADDITION TO THE SPECIFIED TEST PIT LOCATIONS AS DENOTED ON THE PLANS AND SHALL NOT BE LIMITED TO EXCAVATION SOLELY BUT INCLUDE ANY ADDITIONAL MEANS TO DETERMINING THE LOCATION OF UTILITIES IN QUESTION.


TRC
215 GREENFIELD PARKWAY
SUITE 102
LIVERPOOL, N.Y. 13088


COMMONWEALTH OF MASSACHUSETTS
DANIEL D'ELETTO
CIVIL
No. 55061
REGISTERED PROFESSIONAL ENGINEER

Daniel D'Eletto, P.E. 2023.05.12 15:13:14-04'00'
SIGN & DATE

| NO. | DESCRIPTION | DATE | DR.BY | CK.BY | APP.BY |
|---|---|---|---|---|---|
| 1 | REVISED NOTES, ADDED PITCP, VALVE BOX STANDARD, & CALLOUTS | 05/12/2023 | PL | JNS | DD |
| 0 | ISSUED FOR CONSTRUCTION | 05/04/2023 | JRS | JNS | DD |

nationalgrid
170 DATA DRIVE
WALTHAM, MA 02451

FINAL

NBRESENT PROGRAM
INSTALL 4" PL (25 PSIG)
56 SHAW RD
BELMONT, MASSACHUSETTS

COVER PAGE

| DWG SIZE | DESIGNER | ENGINEER | DATE: | ASSET I.D. | W.O. NO.: |
|---|---|---|---|---|---|
| 24"X36" | J.R. SMITH | D. D'ELETTO | 05/04/2023 | XXXXXXXXXXX | 1532089 |



DRAWING NO.
NBR-BEL-1532089 G-001

## CONSTRUCTION NOTES

**SCOPE OF WORK**

NATIONAL GRID WORK ORDER NUMBER 1532089:
56 SHAW RD, BEL
INSTALL APPROX. 25 FEET OF 4 INCH, 25 PSIG PLASTIC MAIN EXTENDING FROM EXISTING 4 INCH, 25 PSIG PLASTIC (2002) IN SHAW RD FROM EXISTING EOM TO #56 SHAW RD.
NOTE: SITE VISIT CONFIRMS THAT EXISTING MAIN IS MAPPED INCORRECTLY - MAIN IS 25 FEET SHORT OF #56 SHAW RD.
1 MAIN CONNECTION.
APPROXIMATELY 1 SERVICE IS INCLUDED BASED ON AVAILABLE RECORDS AND MAPPING. TO BE FIELD CONFIRMED.

**GENERAL**

1 NO FIELD CHANGES SHALL BE MADE TO THIS DESIGN WITHOUT APPROVAL FROM THE ASSIGNED NATIONAL GRID ENGINEER:
ENGINEER: DAN BRACK
PHONE: 774-245-3923
EMAIL: DANIEL.BRACK@NATIONALGRID.COM
2 NEW MAINS SHOULD BE INSTALLED IN ACCORDANCE WITH THE TYPICAL TRENCH DETAIL INCLUDED IN THESE DRAWINGS, UNLESS NOTED OTHERWISE.
A 36 INCHES OF COVER FROM FINAL GRADE WHERE PRACTICAL.
B STATE HIGHWAY MINIMUM COVER: 36 INCHES
C DISTRIBUTION MAIN MINIMUM COVER: 24 INCHES
D SAND PADDING IN ALL DIRECTIONS, 6 INCHES MINIMUM.
E CAUTION TAPE SHALL BE INCLUDED ONE FOOT BELOW GRADE.
3 SERVICES SHOULD BE INSTALLED WITH 24 INCHES OF COVER.
A MINIMUM IN PUBLIC ROW: 18 INCHES
B MINIMUM IN PRIVATE PROPERTY: 12 INCHES
C SAND PADDING IN ALL DIRECTIONS, 6 INCHES MINIMUM.
D CAUTION TAPE SHALL BE INCLUDED ONE FOOT BELOW GRADE.
4 REFER TO CNST-6030 FOR SHALLOW MAINS. PRIOR TO INSTALLING GAS MAINS WITH LESS THAN 24 INCHES OF COVER, COMPLETE REQUEST FOR WAIVER FORM AND CONTACT GAS PIPELINE SAFETY & COMPLIANCE FOR APPROVAL:
A JENNIFER GILLIS - (617) 594-5157
(MA EXCLUDING CAPE AND WEBSTER)
B LIEN GAUTHIER - (617) 438-9069
(MA EXCLUDING CAPE AND WEBSTER)
C IF A PROPOSED TOP TEE CONNECTION RESULTS IN A SHALLOW MAIN THAT CANNOT MEET THE WAIVER CRITERIA, A FULL TEE CONNECTION IS AN ACCEPTABLE ALTERNATIVE. A SPHERICAL TEE IS ONLY ACCEPTABLE WITH APPROVAL FROM NATIONAL GRID STRATEGIC ASSET AND SYSTEM PLANNING.
5 ALL MAINS SHOULD BE INSTALLED WITH CLEARANCE OF 12 INCHES FROM OTHER FACILITIES.
A DISTRIBUTION MINIMUM CLEARANCE: 6 INCHES
B APPROPRIATE PROTECTIVE MEASURES SHALL BE USED TO PROTECT THE GAS FACILITY IF MINIMUMS CANNOT BE ATTAINED. APPROVAL IS REQUIRED BY GAS SYSTEMS ENGINEERING.
6 THE PIPE ALIGNMENT IS SHOWN FOR REFERENCE ONLY AS APPROXIMATELY 3 FEET FROM THE EXISTING MAIN (BASED ON AVAILABLE RECORD INFORMATION). THE ACTUAL ROUTE AND ALL VERTICAL AND HORIZONTAL OFFSETS ARE TO BE FIELD ROUTED WITHIN THE PUBLIC RIGHT-OF-WAY BASED ON THE ACTUAL LOCATION OF EXISTING UTILITIES. ADDITIONAL FITTINGS NOT SHOWN WILL BE REQUIRED.
A ELBOWS SHOWN ARE ASSUMED TO BE 45 DEGREES IN MOST APPLICATIONS. 90 DEGREE ELBOWS MAY BE NEEDED BASED ON FIELD CONDITIONS.
7 VALVES DEPICTED IN THE DESIGN ARE THE MINIMUM REQUIRED FOR SECTIONALIZING, ISOLATION, CRITICAL VALVES, AND/OR TO ACCOMMODATE TIE-INS. ADDITIONAL FULL PORT VALVES MAY BE ADDED TO ACCOMMODATE CONSTRUCTION.
A VALVES FOR BRANCHES AT INTERSECTIONS SHOULD BE FIELD LOCATED JUST OUTSIDE OF THE INTERSECTION WHERE EASILY ACCESSIBLE, PRIOR TO THE FIRST SERVICE.
8 ELECTROFUSION COUPLINGS MAY BE INTERCHANGED WITH BUTT FUSION WHERE APPLICABLE.
9 TIE-IN LOCATIONS MAY VARY UP TO 100 FEET OF THE PROPOSED LOCATION TO ACCOMMODATE CONSTRUCTION, EXCEPT FOR WHEN THE FOLLOWING CONDITIONS APPLY:
A REGULATOR STATION WITHIN THE SCOPE OF THE JOB OR WITHIN 200 FEET OF THE TIE-IN LOCATION.
B CHANGE TO THE NUMBER OF CONNECTIONS (ADDITIONAL ADDED FROM AN INTERSECTION OR OTHERWISE).
C MATERIAL/SIZE CHANGE AT NEW LOCATION.
10 NOT ALL BYPASSES, GAUGES, PURGES AND OTHER MISCELLANEOUS FITTINGS ARE SHOWN. CONSTRUCTION SHALL INSTALL THESE FITTINGS AS NEEDED IN ACCORDANCE WITH THE APPROVED SOP.
11 WHEN CONNECTING NEW 'DEAD' MAIN TO NEW 'DEAD' MAIN: AS LONG AS THE CONNECTION BRANCH SIZE SHOWN IN THE DRAWINGS CAN BE ACHIEVED, THE FOLLOWING CONNECTION TYPES ARE ACCEPTED AND INTERCHANGEABLE:
A INLINE TEE
B PLASTIC HIGH VOLUME TAPPING TEE (2" BRANCH SIZE OR LESS)
C PLASTIC BRANCH SADDLE (WITH MAIN CUTTER SIZE SHOWN IN NATIONAL GRID POLICIES)
D STEEL THREE-WAY TEE (WITH MAIN CUTTER SIZE SHOWN IN NATIONAL GRID POLICIES)
12 THE LIVE MAIN CONNECTION DETAIL SHOWN IN THE DRAWINGS SHALL BE FOLLOWED. ANY CHANGES TO THE TIE IN CONNECTION TYPE SHALL BE APPROVED BY THE NATIONAL GRID ENGINEER PRIOR TO CONSTRUCTION.
13 WHEN RELAYING A LOWER PRESSURE MAIN WITH A HIGHER PRESSURE MAIN, ALL SERVICES SHALL BE RELAYED OR INSERTED.
14 CONTRACTOR SHALL CALL DIGSAFE (DIAL 811 OR 888-344-7233) AT LEAST 72 HOURS PRIOR TO CONSTRUCTION. SATURDAYS, SUNDAYS, AND HOLIDAYS ARE EXCLUDED.
15 CONTRACTOR SHALL VERIFY THE LOCATION OF ALL UTILITIES AND STRUCTURES DEPICTED OR NOT DEPICTED ON THIS DESIGN PRIOR TO CONSTRUCTION.

**DESIGN CRITERIA**

1 DESIGN IN ACCORDANCE WITH THE FOLLOWING:
A ENG02001 : DESIGN OF GAS SERVICES
B ENG04001: DESIGN OF DISTRIBUTION MAINS
C ENG04010: DESIGN REQUIREMENTS FOR INSTALLATION OF CASINGS
2 PROPOSED PIPING:
A DESIGN CLASS LOCATION - 4
B NOMINAL SIZE – 4 INCH
C MATERIAL – MDPE
D SYSTEM MAOP – 25 PSIG
3 PIPE SIZE DETERMINED BY NATIONAL GRID STRATEGIC ASSET AND SYSTEM PLANNING.

**PROJECT CONSTRUCTION REQUIREMENTS:**

1 PER NATIONAL GRID GAS POLICY DOC# ENG05004, ALL COMPLEX PROJECT'S ARE REQUIRED TO PREPARE AN SOP IN ACCORDANCE WITH THE STAMPED PLANS, WHICH MUST BE APPROVED BY A PROFESSIONAL ENGINEER. THE SOP MUST INCLUDE ALL PROPOSED PROJECT SPECIFIC STEPS AND PROCEDURES TO DEFINE AN ADEQUATE SEQUENCE FOR CONSTRUCTION OF THE MAIN.
2 IN ACCORDANCE WITH MASSACHUSETTS 220 CMR 105.00, THE STAMPED SOP IS CONSIDERED PART OF A REQUIRED PROJECT SPECIFIC PACKAGE TO PERFORM ANY COMPLEX PROJECT CONSTRUCTION. THEREFORE, FOR ANY COMPLEX PROJECT CONSTRUCTION WORK, THE CONTRACTOR MUST FOLLOW THE PE STAMPED SOP.

**CODES & STANDARDS**

1 WORK SHALL CONFORM TO ALL LOCAL, STATE, AND FEDERAL CODES IN ADDITIONAL TO NATIONAL GRID GAS POLICIES AND WORK METHODS. WHERE ANY CONFLICTS OF CODES, STANDARDS AND REGULATIONS MAY EXIST, THE MORE STRINGENT CODE, STANDARD, OR REGULATION SHALL APPLY.
2 ALL REFERENCES SHALL BE IN ACCORDANCE WITH THE MOST CURRENT REVISION AVAILABLE AT THE TIME OF CONSTRUCTION.
3 FEDERAL & STATE
A TITLE 49: PART 192 TRANSPORTATION OF NATURAL AND OTHER GAS BY PIPELINE: MINIMUM FEDERAL SAFETY STANDARDS
B 220 CMR: DEPARTMENT OF PUBLIC UTILITIES
100.00 - 113.00: MASSACHUSETTS GAS DISTRIBUTION CODE
C AMERICAN SOCIETY OF MECHANICAL ENGINEERS
B31.8: GAS TRANSMISSION AND DISTRIBUTION PIPING SYSTEMS
4 CONSTRUCTION SHALL BE PERFORMED IN ACCORDANCE WITH NATIONAL GRID GAS POLICIES AND WORK METHODS, INCLUDING BUT NOT LIMITED TO:
A CNST01003: BACKFILL AND RESTORATION
B CNST01005: PREPARATION OF GAS FACILITY HISTORICAL RECORDS
C CNST01006: COMMERCIALLY AVAILABLE SHORING SYSTEMS
D CNST02014: ENCAPSULATING CAST IRON JOINTS
E CNST03001: SQUEEZE-OFF OPERATIONS
F CNST03002: STOP-OFF OPERATIONS ON LOW PRESSURE MAINS
G CNST03005: PURGING REQUIREMENTS FOR GAS PIPELINES
a. CNST03006: PURGING OPERATIONS – DIRECT DISPLACEMENT
b. CNST03007: PURGING OPERATIONS – COMPLETE INERT FILL
c. CNST03008: PURGING OPERATIONS – SLUG METHOD
H CNST03014: STOP OFF OPERATIONS FOR KLEISS EQUIPMENT
I CNST04005: INSTALLING STEEL DISTRIBUTION MAINS
J CNST04007: FIELD COLD BENDING OF LINE PIPE
K CNST04008: INSTALLING PLASTIC MAINS
L CNST04011: ABANDONMENT OF MAINS
M CNST04012: GROUTING ABANDONED PIPELINES
N CNST04030: RAISING MAIN AND SERVICE GATE BOXES
O CNST05001: JOINING OF PLASTIC PIPE
P CNST05011: INSTALLATION OF DRESSER 700 COUPLINGS
Q CNST5010: GENERAL CONSTRUCTION REQUIREMENTS AND PIPE HANDLING
R DAM01011: EXCAVATION AND EXCAVATION NOTIFICATION REQUIREMENTS FOR UNDERGROUND FACILITIES FOR MASSACHUSETTS AND RHODE ISLAND
S DAM01015: LOCATE AND MARK-OUT REQUIREMENTS FOR UNDERGROUND GAS FACILITIES
T DAM01016: LOCATE AND MARK-OUT OF UNDERGROUND FACILITIES
U GCON02001: SYSTEM OPERATING PROCEDURE (SOP)
V GEN01100: OPERATOR QUALIFICATION PLAN
W GEN03002: PROCESSING GAS MAIN AND NEW SERVICE WORK PACKAGES
X GEN03004: CHANGE CONTROL PROCEDURE FOR STANDARD CONSTRUCTION PROJECTS
Y INR06002: SUPPLEMENTAL ODORIZATION FOR NEW PIPING
Z MAIN5030: INSTALLATION OF POLYETHYLENE PIPE
AA MECH5010: JOINTS OTHER THAN WELDED
BB 030018-CS: SPECIFICATION AND HANDLING OF TRAFFIC PLATES
5 SERVICE SPECIFIC CONSTRUCTION STANDARDS, GAS POLICIES AND WORK METHODS:
A CMS03002: CUSTOMER METER AND SERVICE REGULATOR DESIGN AND INSTALLATION POLICY
B CMS04002: PURGING PROCEDURES FOR CUSTOMER METER SERVICES
C CNST03011: NO-INTERRUPT SERVICE TRANSFER
D CNST06002: INSTALLING DISTRIBUTION SERVICES
E CNST06003: INSTALLATION & MAINTENANCE POLICY FOR CURB VALVES ON SERVICE LINES WITH INSTALLED METER CAPACITIES OVER 1,000 SCFH THAT DON'T HAVE EXCESS FLOW VALVES
F CNST06009: METER/SERVICE RELOCATION GUIDELINE
G CNST06020: COMPLETION AND PROCESSING OF GAS SERVICE RECORD CARDS
H CNST06030: NOTIFICATION OF CUSTOMERS INVOLVED IN THE INTERRUPTION OF GAS SERVICE
I CS-SERV001: TYPICAL 1/2" SERVICE OUTSIDE SETS
J CS-SERV002: TYPICAL 1" SERVICE OUTSIDE SETS
K CS-SERV003: TYPICAL 1-1/4" SERVICE OUTSIDE SETS
L CS-SERV004: TYPICAL 2" SERVICE
M CS-SERV005: EXCESS FLOW VALVE REQUIREMENTS ON HP SERVICES
N CS-SERV009: TYPICAL 1/2" SERVICE INSIDE SETS
O CS-SERV010: TYPICAL 1" SERVICE INSIDE SETS
P HTAP-6010: NO-INTERRUPT 1 INCH CTS AND 1-1/4 INCH CTS SERVICE TRANSFER (NIST) LP TO 60 PSIG MAINS
Q SERV-5075: RELOCATION OF METER SET ASSEMBLIES INSIDE TO OUTSIDE
R SERV-6185: HOT TAPPING MD BRANCH SADDLES OFF 4IN - 12IN 60 PSIG MAOP LIVE PLASTIC GAS MAIN USING MCELROY HOT TAPPING TOOL
S VALV6110: 1/2 INCH - 3 INCH POLYETHYLENE GAS SERVICE VALVE INSTALLATION
6 SEE TIE IN DETAILS FOR APPLICABLE MAIN CONNECTION REFERENCES.
7 SEE BILL OF MATERIAL FOR MATERIAL SPECIFICATION, STANDARD AND/OR APPLICABLE NATIONAL GRID "FITS" REFERENCE.
A FOR THIS PROJECT, GRADE B, X42, X52 AND EQUIVALENT ARE ACCEPTABLE STEEL MATERIAL STRENGTHS IF APPLICABLE. ALTERNATES TO THE BOM ARE ALLOWED WITHIN THIS RANGE BASED ON MATERIAL AVAILABILITY.

**PRESSURE TESTING**

1 PRESSURE TEST MAIN IN ACCORDANCE WITH:
A CNST04003: PRESSURE TESTING MAINS OPERATING BELOW 125 PSIG
B TEST PRESSURE (MINIMUM): 90 PSIG
C TEST DURATION BASED ON LENGTH AND DIAMETER IN ACCORDANCE WITH TABLE 1.
D TEST MEDIUM: AIR AND/OR NITROGEN
2 PRESSURE TEST SERVICES IN ACCORDANCE WITH:
A CNST06008 : PRESSURE TESTING SERVICE LINES

**WELDING**

1 NATIONAL GRID WELDING GAS POLICIES AND WORK METHODS INCLUDE:
A CNST05002: WELDING POLICY
B CNST05003: PIPE WELDING SAFETY
C CNST05005: WELDING PROCEDURE SPECIFICATIONS
D MS-030: WELDING FILLER MATERIALS
2 PRIOR TO THE START OF ANY WORK THE CONTRACTOR SHALL SUBMIT WELDER CERTIFICATION DOCUMENTS FOR EACH OF THE WELDERS EMPLOYED ON THIS PROJECT.
3 WELDING PROCEDURE SPECIFICATIONS REQUIRED:
A BUTT WELDS (GROOVE): WPS-SMAW-E6010/7010 (LATEST REVISION)
B FILLET WELDS (BRANCH): WPS-SMAW-E6010/7010 (LATEST REVISION)
4 10% (AT LEAST 1) OF WELDS IN EACH CATEGORY BELOW SHALL BE SUBJECT TO NON-DESTRUCTIVE EXAMINATION (NDE).
A BUTT WELDS 2-INCH AND GREATER: 10% RADIOGRAPH
B BUTT WELDS < 2-INCHES: 10% MAGNETIC PARTICLE
C FILLET WELDS: 10% MAGNETIC PARTICLE
5 NDE AND WELD MAP SHALL BE PROVIDED BY SKYTESTING.
6 SKYTESTING SCHEDULING CONTACT:
WILLIAM (BILL) CLARK
CELL: 704-858-7794
EMAIL: WCLARK@SKYTESTING.COM

**CATHODIC PROTECTION**

1 IF EXISTING TEST STATIONS, WIRES, AND/OR MAGNESIUM ANODES ARE DISTURBED OR DAMAGED, NOTIFY THE NATIONAL GRID CORROSION DEPARTMENT:
CONSTRUCTION: DAVE HALNEN 781-379-7831
DESIGN REVIEW: ALANNA GRONDINE 339-225-5378
2 24 HOUR NOTICE IS REQUIRED PRIOR TO INSTALLATION OF INSULATED FITTINGS TO ALLOW FOR ACCEPTANCE TESTING.
3 NATIONAL GRID CORROSION GAS POLICIES AND WORK METHODS INCLUDE:
A COR01100: CORROSION DESIGN CRITERIA
B COR02001: APPLICATION OF COATING SYSTEMS
C COR02020: INSPECTING EXPOSED STEEL PIPE FOR CORROSION
D COR02021: INSPECTING EXPOSED CAST OR DUCTILE PIPING FOR GRAPHITIZATION
E COR03001: TESTING OF PIPE COATING (JEEP TESTING)
F COR04001: INSTALLATION OF MAGNESIUM ANODES
G COR04003: INSTALLATION OF TEST STATIONS FOR CATHODIC PROTECTION
H COR04004: INSTALLATION OF WIRE CONNECTIONS
I COR04005: INSTALLATION OF INSULATING JOINTS FOR CATHODIC PROTECTION
J 030041-CS: FACILITY COATING GUIDE
4 CORROSION DESIGN: N/A

**ENVIRONMENTAL**

1 WORK SHALL CONFORM TO THE NATIONAL GRID ENVIRONMENTAL POLICY.
2 ENVIRONMENTAL ENGINEERING CONTACT:
JAIME WALKER
PHONE: (978)-551-1156
EMAIL: JAIME.WALKER@NATIONALGRID.COM
3 CONTRACTOR SHALL REVIEW THE PROJECT WORK ORDER PACKAGE FOR ENVIRONMENTAL GUIDANCE FORMS, FOR EXAMPLE EG-301, FOR THE RESPECTIVE STATE.
4 WHEN SOILS OR LIQUIDS ARE ENCOUNTERED THAT ARE BELIEVED TO BE CONTAMINATED WITH OIL AND/OR HAZARDOUS MATERIAL, EXCAVATION WORK SHALL BE HAULTED AND FIELD PERSONNEL SHALL NOTIFY THEIR IMMEDIATE SUPERVISOR.
5 NO EXCAVATED SOIL SHALL LEAVE THE WORK SITE UNTIL ENVIRONMENTAL HAS MADE A DETERMINATION FOR ITS PROPER DISPOSAL.
6 NATIONAL GRID ENVIRONMENT POLICIES AND PROCEDURES INCLUDE:
A SHE02001: HANDLING CONTAMINATED MATERIALS AND PIPING
B SHE02002: REMOVING MERCURY REGULATORS AND DEVICES
C SHE02003: ENCOUNTERING CONTAMINATION WHILE EXCAVATING
D EG303-NE: BEST MANAGEMENT PRACTICES
E EG140: USED GAS PIPE MANAGEMENT
7 ENVIRONMENTAL REQUIREMENTS: HISTORIC SITES LOCATED WITHIN PROJECT SCOPE. ENVIRONMENTAL PERMIT AND ADDITIONAL CONSTRUCTION CONSIDERATIONS MAY BE REQUIRED. SEE ENVIRONMENTAL MEMO FOR DETAILS.

**SAFETY**

1 WORK SHALL CONFORM TO THE NATIONAL GRID EMPLOYEE SAFETY HANDBOOK AND OSHA REQUIREMENTS.
2 REQUIRED PPE SHALL BE WORN AND UTILIZED IN ACCORDANCE WITH THE CURRENT NATIONAL GRID SAFETY POLICY.
3 A NATIONAL GRID APPROVED CONTRACTOR HEALTH AND SAFETY PLAN (HASP) IS REQUIRED PRIOR TO CONSTRUCTION.
4 CONSTRUCTION SIGNING, DRUMS, BARRICADES, AND OTHER DEVICES SHALL CONFORM TO THE MANUAL ON UNIFORM TRAFFIC CONTROL DEVICES (M.U.T.C.D.) PART VI AND SHALL BE MAINTAINED BY THE CONTRACTOR.
5 NATIONAL GRID SAFETY PROCEDURES COVER THE FOLLOWING CATEGORIES:
A A- ADMINISTRATIVE; B- INSPECTIONS; C- WALKING WORKING SURFACES; D- MEANS OF EGRESS; E- MATERIAL HANDLING AND STORAGE; F- TOXIC AND HAZARDOUS SUBSTANCES; G- HAZARDOUS MATERIALS; H- PERSONAL PROTECTIVE EQUIPMENT; I- GENERAL ENVIRONMENTAL CONTROLS, J- ACCIDENT INVESTIGATION; K- MACHINERY AND GUARDING; L- WELDING/CUTTING/BRAZING; M- EXCAVATIONS; N- CONTRACTORS; FIRE PROTECTION; Q- FLEET AND ROADWAY SAFETY
6 GAS WORK METHODS SAFETY PROCEDURES INCLUDE:
A SHE01001: GENERAL SAFETY REQUIREMENTS
B SHE01002: SUPPLIED-AIR RESPIRATORS
C SHE01003: USING AND MAINTAINING PORTABLE GAS MONITORS
D SHE01004: USING AND MAINTAINING FLAME IONIZATION UNITS
E SHE01005: DISSIPATING STATIC ELECTRICAL CHARGES ON PLASTIC PIPE
F SHE01006: ENTERING GAS UTILITY VAULTS
G SHE01008: USING AND MAINTAINING THE GAS-EXPLORER
H SHE01009: DISSIPATING STATIC ELECTRICAL CHARGES ON PLASTIC PIPE
I SHE01010: THE APPLICATION OF FORMAL PROCESS SAFETY ASSESSMENTS TO HIGHER-RISK GAS ACTIVITIES PERFORMED IN THE FIELD

**OTHER PERMITTING REQUIREMENTS**

1 STREET OPENING PERMIT(S): SHAW RD, BELMONT, MA
2 GOL PERMIT REQUIRED FROM THE TOWN OF BELMONT, MA
3 TMP REQUIRED FOR ALL PROPOSED WORK IN BELMONT, MA

**REFERENCE DRAWINGS**

1 LOCATION OF IDENTIFIED UNDERGROUND UTILITIES ARE AN APPROXIMATE BASED ON AVAILABLE RECORD AND FIELD INFORMATION IN ACCORDANCE WITH CI/ASCE 38-02. ADDITIONAL UTILITIES MAY EXIST WHICH ARE NOT IDENTIFIED ON THESE PLANS. ALL EXISTING UTILITIES SHALL BE VERIFIED BY THE CONTRACTOR FOR SERVICE, SIZE, INVERT ELEVATIONS, LOCATIONS, ETC.

## BILL OF MATERIALS

| ITEM | QTY | UOM | DESCRIPTION | SIZE (IN.) | NATIONAL GRID REFERENCE | SAP ID NUMBER |
|---|---|---|---|---|---|---|
| | | | **GAS MAIN** | | | |
| 4 | 25 | FT | PIPE, PLASTIC, MDPE, PE 2708, SDR 11.5, 40' STICK | 4 | CS-FIT001 | 9340857 |
| 84 | 1 | EA | VALVE, PLASTIC, FULL PORT BALL, MDPE, SDR 11.5 | 4 | VALV-6020 | 9341709 |
| 85 | 1 | EA | ROADWAY VALVE BOX WITH COVER | 4 | VALV-6020 | 9339892 |
| 172 | 1 | EA | COUPLING, PLASTIC, ELECTROFUSION, HDPE | 4 | CS-FIT015 | 9314593 |
| 247 | 1 | EA | CAP, PLASTIC, BUTT FUSE, MDPE, SDR 11.5 | 4 | CS-FIT010 | 9339534 |
| | | | **GENERAL** | | | |
| G1 | 25 | FT | TRACER WIRE, DIRECT BURY, COPPER, 12 AWG | 12 AWG | CNST-6061 | 9315005 |
| G2 | 25 | FT | YELLOW CAUTION TAPE - GAS MAIN - 6" WIDE | 6 | CNST-6060 | 9341904 |
| | | | **PRESSURE TEST/PURGE (TEMPORARY)** | | | |
| P3 | 1 | EA | TEE, SERVICE, PLASTIC, HDPE, EF,1" IPS OUTLET | 4 | CS-MAIN004 | 9322620 |
| P9 | 1 | EA | CAP, PLASTIC, BUTT FUSE, MDPE, SDR 11.5 | 4 | CS-FIT010 | 9339534 |
| P20 | 1 | EA | COUPLING, PLASTIC, ELECTROFUSION, HDPE, IPS X CTS | 1 | FITS-6022 | 9341488 |
| P21 | 1 | EA | RISER, ANODELESS, 1" CTS MDPE X 3/4" IPS STEEL OUTLET | 1 | CS-MAIN004 | 9344366 |
| P22 | 1 | EA | END CAP, PERMASERT, CTS | 1 | FITS-6022 | 9312356 |

*MATERIAL QUANTITIES SPECIFIED REPRESENT MINIMUM QUANTITIES ONLY. FINAL QUANTITIES MAY CHANGE SUBJECT TO MEETING NATIONAL GRID STANDARDS AND DESIGN/SPEC REQUIREMENTS


TRC
215 GREENFIELD PARKWAY
SUITE 102
LIVERPOOL, N.Y. 13088


COMMONWEALTH OF MASSACHUSETTS
DANIEL D'ELETTO
CIVIL
No. 55061
REGISTERED PROFESSIONAL ENGINEER
Daniel D'Eletto, P.E. 2023.05.12 16:33:15-04'00'
SIGN & DATE

| NO. | DESCRIPTION | DATE | DR.BY | CK.BY | APP.BY |
|---|---|---|---|---|---|
| 1 | REVISED NOTES, ADDED PTTCP, VALVE BOX STANDARD, & CALLOUTS | 05/12/2023 | PL | JNS | DD |
| 0 | ISSUED FOR CONSTRUCTION | 05/04/2023 | JRS | JNS | DD |

nationalgrid
170 DATA DRIVE
WALTHAM, MA 02451

FINAL

NBRESENT PROGRAM
INSTALL 4" PL (25 PSIG)
56 SHAW RD
BELMONT, MASSACHUSETTS

CONSTRUCTION NOTES AND BILL OF MATERIALS

| DWG SIZE | DESIGNER | ENGINEER | DATE: | ASSET I.D. | W.O. NO.: |
|---|---|---|---|---|---|
| 24"X36" | J.R. SMITH | D. D'ELETTO | 05/04/2023 | XXXXXXXXXXX | 1532089 |

**SCOPE OF WORK**
NATIONAL GRID WORK ORDER NUMBER 1532089:
56 SHAW RD, BEL
- INSTALL APPROX. 25 FEET OF 4 INCH, 25 PSIG PLASTIC MAIN EXTENDING FROM EXISTING 4 INCH, 25 PSIG PLASTIC (2002) IN SHAW RD FROM EXISTING EOM TO #56 SHAW RD.
NOTE: SITE VISIT CONFIRMS THAT EXISTING MAIN IS MAPPED INCORRECTLY - MAIN IS 25 FEET SHORT OF #56 SHAW RD

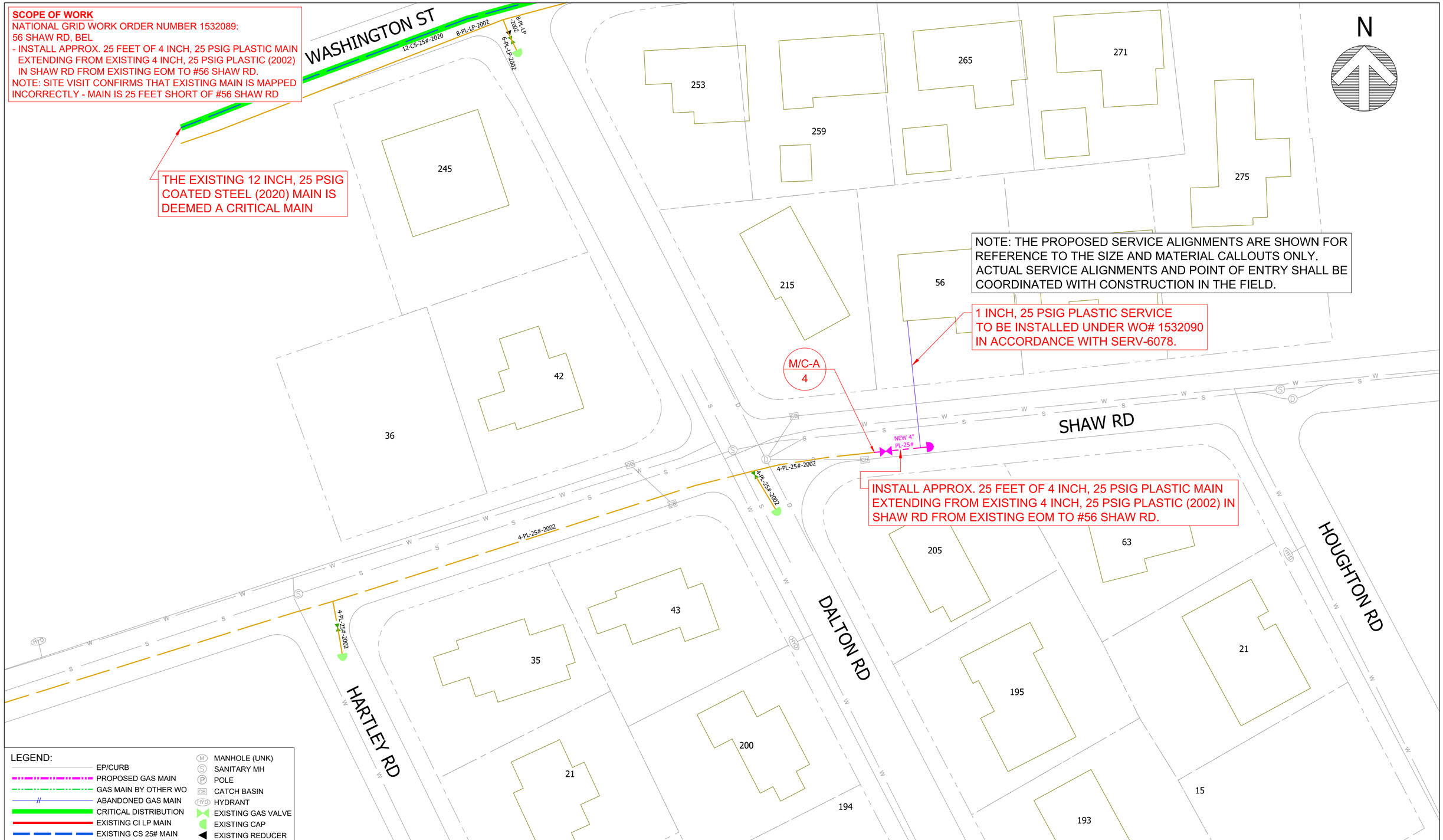


LEGEND:

- EP/CURB
- PROPOSED GAS MAIN
- GAS MAIN BY OTHER WO
- ABANDONED GAS MAIN
- CRITICAL DISTRIBUTION
- EXISTING CI LP MAIN
- EXISTING CS 25# MAIN
- EXISTING PL LP MAIN
- EXISTING PL 25# MAIN
- PROPERTY LINE
- SEWER LINE
- DRAIN LINE
- WATER LINE
- MANHOLE (UNK)
- SANITARY MH
- POLE
- CATCH BASIN
- HYDRANT
- EXISTING GAS VALVE
- EXISTING CAP
- EXISTING REDUCER
- NEW GAS VALVE
- NEW CAP
- NEW REDUCER
- BOM ITEM#
- MAIN/ CONNECTION#
- PAGE #

TRC
215 GREENFIELD PARKWAY
SUITE 102
LIVERPOOL, N.Y. 13088

0 20 40 80
APPROXIMATE SCALE: 1" = 20' (WHEN PLOTTED 24" x 36")
APPROXIMATE SCALE: 1" = 40' (WHEN PLOTTED 11" x 17")

COMMONWEALTH OF MASSACHUSETTS
DANIEL D'ELETTO
CIVIL
No. 55061
REGISTERED PROFESSIONAL ENGINEER
Daniel D'Eletto, P.E. 2023.05.12 16:13:15-04'00'
SIGN & DATE

| NO. | DESCRIPTION | DATE | DR.BY | CK.BY | APP.BY |
|---|---|---|---|---|---|
| 1 | REVISED NOTES, ADDED PTTCP, VALVE BOX STANDARD, & CALLOUTS | 05/12/2023 | PL | JNS | DD |
| 0 | ISSUED FOR CONSTRUCTION | 05/04/2023 | JRS | JNS | DD |

nationalgrid
170 DATA DRIVE
WALTHAM, MA 02451

FINAL

NBRESENT PROGRAM
INSTALL 4" PL (25 PSIG)
56 SHAW RD
BELMONT, MASSACHUSETTS

PROPOSED INSTALLATION PLAN

| DWG SIZE | DESIGNER | ENGINEER | DATE: | ASSET I.D. | W.O. NO.: |
|---|---|---|---|---|---|
| 24"X36" | J.R. SMITH | D. D'ELETTO | 05/04/2023 | XXXXXXXXXXX | 1532089 |



DRAWING NO.
NBR-BEL-1532089 C-001

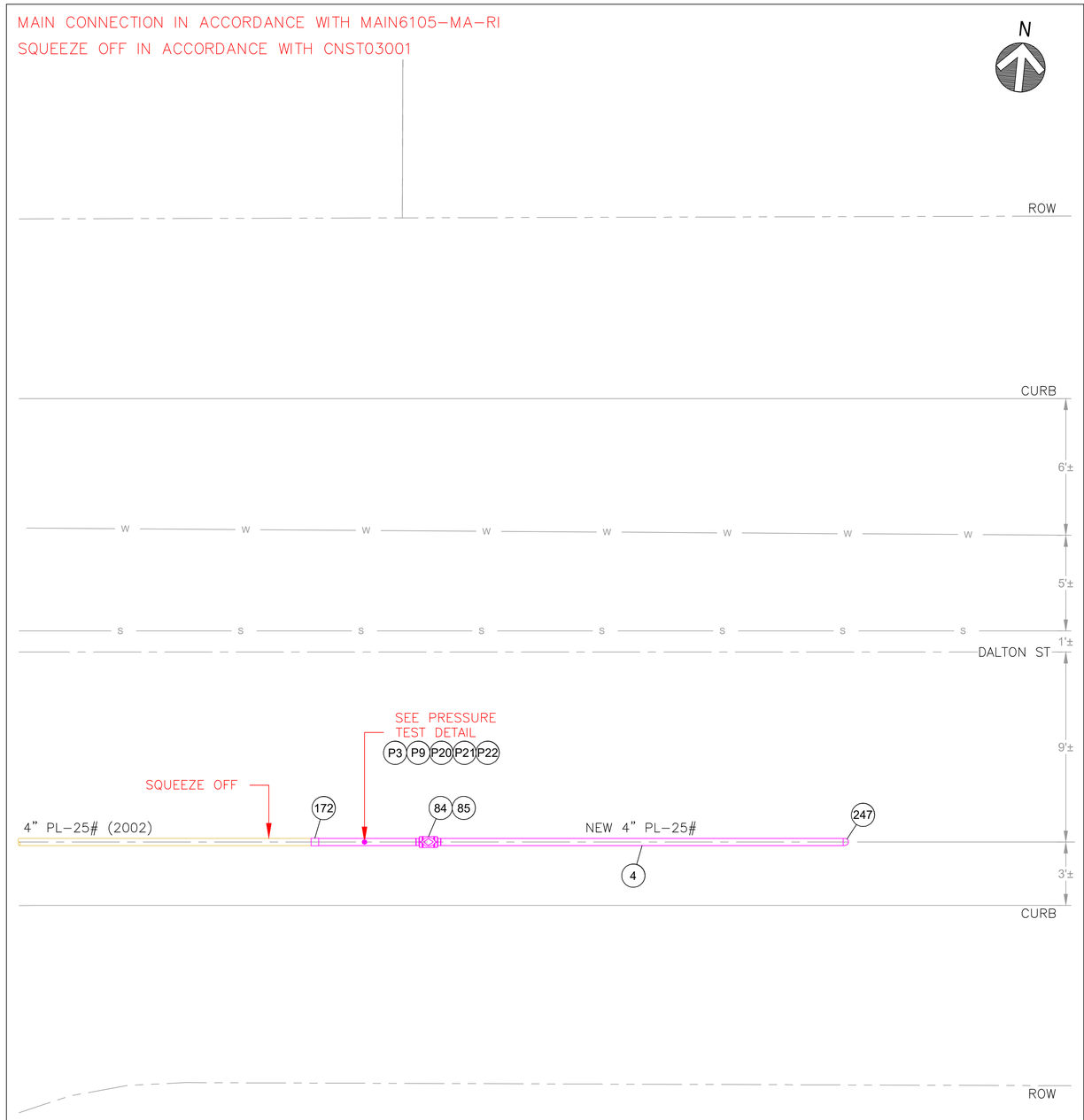


DETAIL M/C-A
SCALE: 1" = 3'-0"

LEGEND:

| | | | |
|---|---|---|---|
| PROPOSED GAS MAIN | D | DRAIN LINE | |
| ABANDONED GAS MAIN | S | SEWER LINE | |
| EXISTING BS GAS MAIN | W | WATER LINE | |
| EXISTING CI GAS MAIN | | CENTERLINE | |
| EXISTING CS GAS MAIN | 7 | BILL OF MATERIALS ITEM NUMBER | |
| EXISTING PL GAS MAIN | | | |

TRC
215 GREENFIELD PARKWAY
SUITE 102
LIVERPOOL, N.Y. 13088

0 3' 6' 12'
APPROXIMATE SCALE: 1" = 3'-0" (WHEN PLOTTED 24" x 36")
APPROXIMATE SCALE: 1" = 6'-0" (WHEN PLOTTED 11" x 17")

COMMONWEALTH OF MASSACHUSETTS
DANIEL D'ELETTO
CIVIL
No. 55061
REGISTERED PROFESSIONAL ENGINEER

Daniel D'Eletto, P.E. 2023.05.12 16:13:15-04'00'
SIGN & DATE

| NO. | DESCRIPTION | DATE | DR.BY | CK.BY | APP.BY |
|---|---|---|---|---|---|
| 1 | REVISED NOTES, ADDED PTTCP, VALVE BOX STANDARD, & CALLOUTS | 05/12/2023 | PL | JNS | DD |
| 0 | ISSUED FOR CONSTRUCTION | 05/04/2023 | JRS | JNS | DD |

nationalgrid
170 DATA DRIVE
WALTHAM, MA 02451

FINAL

NBRESENT PROGRAM
INSTALL 4" PL (25 PSIG)
56 SHAW RD
BELMONT, MASSACHUSETTS

PROPOSED MAIN CONNECTION DETAILS

| DWG SIZE | DESIGNER | ENGINEER | DATE: | ASSET I.D. | W.O. NO.: |
|---|---|---|---|---|---|
| 24"X36" | J.R. SMITH | D. D'ELETTO | 05/04/2023 | XXXXXXXXXXX | 1532089 |



DRAWING NO.
NBR-BEL-1532089 C-101

massDOT Massachusetts Department of Transportation Highway Division

PAGE 20

Work Zone Safety Standard Details and Drawings

STATIONARY OPERATIONS
TWO LANE UNDIVIDED ROADWAY
HALF OF ROADWAY CLOSED

| POSTED SPEED LIMIT (MPH) | SPACING FOR ADVANCE WARNING SIGNS (FT) (A,B,C) | CHANNELIZATION DEVICES (DRUMS OR CONES) | | | |
|---|---|---|---|---|---|
| | | TRAVEL LANE CLOSURE LENGTH (L) (FT) | BUFFER ZONE LENGTH (FT) | DEVICE SPACING (FT) | MIN # OF DEVICES* |
| 25-40 | 500 / 500 / 500 | 50 | 100 | 20 | 30 |
| 45-55 | 500 / 1000 / 1000 | 100 | 150 | 40 | 20 |

* NUMBER OF DEVICES BASED ON 400 FT WORK ZONE.

| POSTED REGULATORY OR WORK ZONE SPEED | SEPARATION BETWEEN RUMBLE STRIPS |
|---|---|
| 36-mph to 55-mph | 15-feet |
| 35-mph and under | 10-feet |

NOTES
1. IF POLICE DETAIL/UNIFORMED FLAGGER SUPPORT IS REQUIRED, PROVIDE TWO UNITS.
2. MA-R2-10a LOCATED AT C/2.
3. ** OPTIONAL AT THE ENGINEER'S DISCRETION.
4. *** SHALL BE DEPLOYED IF RUMBLE STRIPS ARE PRESENT.

LEGEND
- WORK ZONE
- CHANNELIZATION DEVICE
- FLASHING ARROW BOARD
- PORTABLE CHANGEABLE MESSAGE SIGN
- TRUCK MOUNTED ATTENUATOR
- RADAR SPEED FEEDBACK BOARD
- POLICE DETAIL OR UNIFORMED FLAGGER
- TEMPORARY PORTABLE RUMBLE STRIP
- TYPE III BARRICADE

NOT TO SCALE

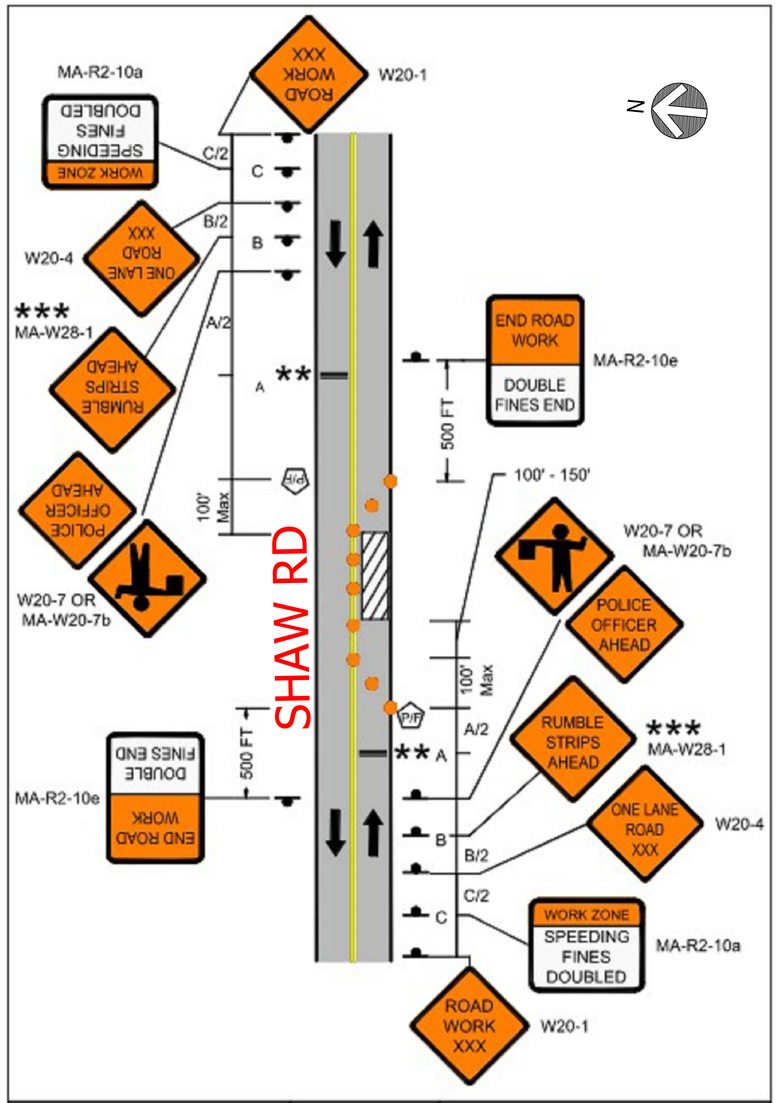


massDOT Massachusetts Department of Transportation Highway Division

PAGE 21

Work Zone Safety Standard Details and Drawings

FIGURE 7
STATIONARY OPERATIONS
TWO LANE UNDIVIDED ROADWAY
HALF OF ROADWAY CLOSED

TEMPORARY TRAFFIC CONTROL (TTC) PLANS WILL COMPLY WITH THE FUNDAMENTAL PRINCIPLES OF TTC AS PER MUTCD PART 6. COMPONENTS OF THE TTC SHOWN ABOVE FOR THE INITIAL WORK AREA WILL BE SHIFTED AS WORK PROGRESSES AT ENGINEER'S DIRECTION.

TRC 215 GREENFIELD PARKWAY SUITE 102 LIVERPOOL, N.Y. 13088

NOT TO SCALE

COMMONWEALTH OF MASSACHUSETTS DANIEL D'ELETTO CIVIL No. 55061 REGISTERED PROFESSIONAL ENGINEER

Daniel D'Eletto, P.E. 2023.05.12 16:13:16-04'00'
SIGN & DATE

| NO. | DESCRIPTION | DATE | DR.BY | CK.BY | APP.BY |
|---|---|---|---|---|---|
| 1 | REVISED NOTES, ADDED PTTCP, VALVE BOX STANDARD, & CALLOUTS | 05/12/2023 | PL | JNS | DD |
| 0 | ISSUED FOR CONSTRUCTION | 05/04/2023 | JRS | JNS | DD |

nationalgrid
170 DATA DRIVE
WALTHAM, MA 02451

FINAL

NBRESENT PROGRAM
INSTALL 4" PL (25 PSIG)
56 SHAW RD
BELMONT, MASSACHUSETTS

PROPOSED TEMPORARY TRAFFIC CONTROL PLAN

| DWG SIZE | DESIGNER | ENGINEER | DATE: | ASSET I.D. | W.O. NO.: |
|---|---|---|---|---|---|
| 24"X36" | J.R. SMITH | D. D'ELETTO | 05/04/2023 | XXXXXXXXXXX | 1532089 |



DRAWING NO.
NBR-BEL-1532089 C-102

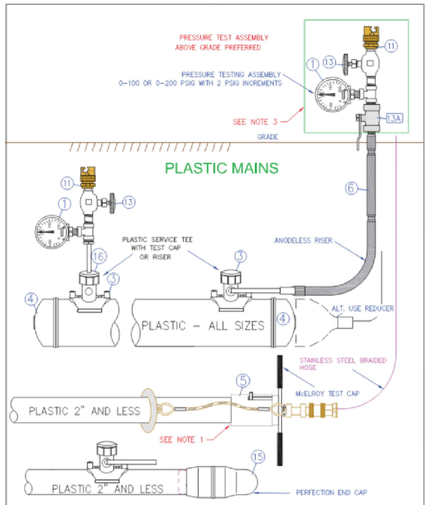


nationalgrid — ALL REGIONS

**PRESSURE TESTING OF NEW MAINS MAOP OF 124 PSIG OR LESS**

DATE: 7/15/2013 — EFFECTIVE DATE: 02/10/2021
DESIGN: PAUL GUGLIOTTA
DRAWN: P.G.
STD. DWG. NO. **CS-MAIN004**

**Key Changes:** UPDATED ITEM ID'S


© National Grid Gas plc 2021– All Rights Reserved

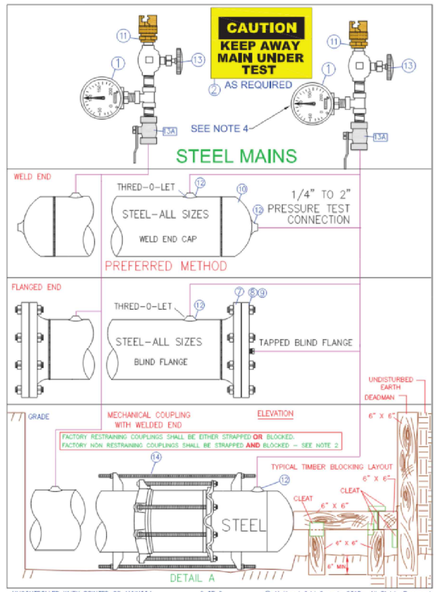



© National Grid Gas plc 2018– All Rights Reserved

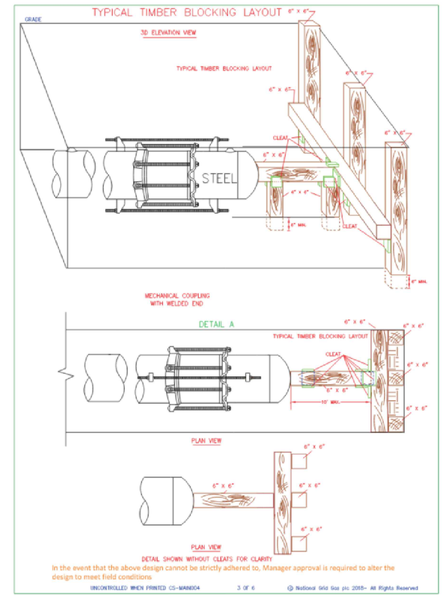



© National Grid Gas plc 2018– All Rights Reserved

NOTES:

1. INSTALL PER MCELROY MANUFACTURER'S INSTRUCTIONS.
2. WHEN USING MECHANICAL COUPLINGS (AS SHOWN IN DETAIL A), NON-RESTRAINING COUPLING SHALL BE STRAPPED AND THE ENDS SHALL BE BLOCKED PER APPROVED STANDARD DRAWINGS. RESTRAINING COUPLINGS NEED TO BE EITHER STRAPPED OR BLOCKED. **WHEN USING RESTRAINING COUPLINGS, STRAPPING NUTS SHOULD BE HAND TIGHT.**

2A. ON EXISTING STEEL SYSTEMS: REFER TO THE TABLE BELOW FOR THE MINIMUM SAFE DISTANCE FROM THE EXCAVATION WALL. IF A BURIED, UNSTRAPPED COUPLING EXISTS AT A DISTANCE LESS THAN THE MINIMUM SAFE EMBEDMENT DISTANCE FROM THE WALL, THEN BLOCKING IS REQUIRED FOR THE PRESSURE TEST. IF AN ALL WELDED SYSTEM CAN NOT BE CONFIRMED, THE WELDED OR FLANGED ENDS SHALL BE BLOCKED

| PIPE SIZE (INCHES) | MINIMUM SAFE DISTANCE FROM THE EXCAVATION WALL (FEET) |
|---|---|
| 1 | 3 |
| 2 | 5 |
| 3 | 6 |
| 4 | 12 |
| 6 | 24 |
| 8 | 41 |
| 12 | 51 |

REFER TO CONSTRUCTION STANDARD FITS-6025 AND FITS-6015 FOR LIST OF COUPLINGS.

3. IT IS RECOMMENDED THAT THE GAUGE ASSEMBLY BE ABOVE GRADE TO PREVENT PERSONNEL FROM ENTERING THE TRENCH WHILE THE PRESSURE TEST IS UNDERWAY.
4. ONE PRESSURE TEST GAUGE AT EACH PIPE END IS RECOMMENDED TO VERIFY THE PRESSURE. ALL GAUGES SHALL BE 0-100 OR 0-200 PSIG RANGE (2 PSIG INCREMENTS REQ'D IN NY STATE ONLY).
5. REFER TO CNST04003 ***PRESSURE TESTING OF MAINS OPERATING BELOW 125 PSIG*** FOR TESTING AND DESIGN REQUIREMENTS.

| ITEM | DESCRIPTION | SAP ITEM ID LI / MA / NYC | SAP ITEMS RI AND UNY |
|---|---|---|---|
| 1 | **PRESSURE GAUGE 0-100 OR 0-200 PSIG – 2 PSI INCREMENTS** | | |
| | 0-200 PSIG STAINLESS STEEL ¼" NPT 3-1/2" DIAL | 9354865 | TOOL ITEM |
| | 0-200 PSIG STAINLESS STEEL ¼" NPT 2-1/2" DIAL | 9358390 | TOOL ITEM |
| | 0-100 PSIG STAINLESS STEEL ¼" NPT | NON STOCK | TOOL ITEM |
| 2 | **SIGN – WARNING PRESSURE TEST (AS REQUIRED IN FIELD)** | 9332240 | NON STOCK |
| 3 | **TEE SERVICE – ELECTROFUSION YELLOW MD 1/2" CTS BUTT FUSE OUTLET** | | |
| | 2" MAIN X ½" BUTT FUSE OUTLET LI/MA/NY/NYC | 9342517 2X1/2 | NON STOCK |
| | 4" MAIN X ½" BUTT FUSE OUTLET LI/MA/NY/NYC | 9342518 4X1/2 | NON STOCK |
| | 6" MAIN X ½" BUTT FUSE OUTLET LI/MA/NY/NYC | 9342516 6X1/2 | NON STOCK |
| | 8" MAIN X ½" BUTT FUSE OUTLET LI/MA/NY/NYC | 9342371 8X1/2 | NON STOCK |
| | **TEE SERVICE – ELECTROFUSION YELLOW MD 1" CTS BUTT FUSE OUTLET** | | |
| | 1-1/4" MAIN X 1" OUTLET LI | 9342332 1-1/4 X 1 | NON STOCK |
| | 2" MAIN X 1" OUTLET LI | 9342519 2X1 | NON STOCK |
| | 4" MAIN X 1" OUTLET LI | 9342521 4X1 | NON STOCK |
| | 6" MAIN X 1" OUTLET LI | 9342328 6X1 | NON STOCK |
| | 8" MAIN X 1" OUTLET LI | 9342372 8X1 | NON STOCK |
| | **TEE SERVICE – ELECTROFUSION BLACK MD 1" IPS BUTT FUSE OUTLET** | | |
| | 2" MAIN X 1" IPS OUTLET MASS | 9322653 2X1 | NON STOCK |
| | 3" MAIN X 1" IPS OUTLET MASS | 9322628 3X1 | NON STOCK |
| | 4" MAIN X 1" IPS OUTLET MASS | 9322620 4X1 | NON STOCK |
| | 6" MAIN X 1" IPS OUTLET MASS | 9322626 6X1 | NON STOCK |
| | 8" MAIN X 1" IPS OUTLET MASS | 9323497 8X1 | NON STOCK |
| | 12" MAIN X 1" IPS OUTLET LI, NYC, MA | 9351631 12X1 | NON STOCK |
| | **TEE SERVICE – SADDLE FUSION HIGH DENSITY BLACK 1/2" CTS BUTT FUSE** | | |
| | 2" MAIN X 1/2" OUTLET LI | 9342405 2X1/2 | NON STOCK |
| | 4" MAIN X 1/2" OUTLET LI | 9342406 4X1/2 | NON STOCK |
| | 6" MAIN X 1/2" OUTLET LI | 9342407 6X1/2 | NON STOCK |
| | 8" MAIN X 1/2" OUTLET LI | 9342408 8X1/2 | NON STOCK |
| | **TEE SERVICE – SADDLE FUSION HIGH DENSITY BLACK 1" CTS BUTT FUSE** | | |
| | 2" MAIN X 1" OUTLET LI | 9342409 2X1 SDR 9 | 9315927 2X1 |
| | 4" MAIN X 1" OUTLET LI | 9342429 4X1 SDR 9 | 9315964 4X1 |
| | 6" MAIN X 1" OUTLET LI/ TO SERVICE | 9342430 6X1 SDR 9 | 9315963 6X1 |
| | 8" MAIN X 1" OUTLET LI | 9342431 8X1 SDR 9 | 9315962 8X1 |
| | 12" MAIN X 1" OUTLET | NON STOCK | 9314629 12X1 |
| | **TEE SERVICE MECHANICAL X PERFECTION OUTLET** | | |
| | 2" MAIN X 1/2" OUTLET | NON STOCK | 9308584 2X1/2 |
| | 4" MAIN X 1/2" OUTLET | NON STOCK | 9308583 4X1/2 |
| | 6" MAIN X 1/2" OUTLET | NON STOCK | 9308472 6X1/2 |
| | 8" MAIN X 1/2" OUTLET | NON STOCK | 9308471 8X1/2 |
| | 2" MAIN X 1" OUTLET | 9315492 2X1 | 9315492 2X1 |
| | 3" MAIN X 1" OUTLET | 9382123 3X1 | N/A |
| | 4" MAIN X 1" OUTLET | 9315490 4X1 | 9315490 4X1 |
| | 6" MAIN X 1" OUTLET | 9308473 6X1 | 9308473 6X1 |
| | 8" MAIN X 1" OUTLET | 9306178 8X1 | 9306178 8X1 |

REFER TO CNST04003 ***PRESSURE TESTING OF MAINS OPERATING BELOW 125 PSIG*** FOR TESTING AND DESIGN REQUIREMENTS.

UNCONTROLLED WHEN PRINTED
Effective Date 7/15/2013


© National Grid Gas plc 2021 – All Rights Reserved
CS-MAIN004

| ITEM | DESCRIPTION | ORACLE ITEM ID LI / MA/ NYC | | PEOPLESOFT ITEM RI AND UNY |
|---|---|---|---|---|
| 4 | **CAP END PLASTIC MEDIUM DENSITY YELLOW BUTT FUSE** | | | |
| | 2" SDR11 | 2" 9339540 | | NON STOCK |
| | 3" SDR 11 | 3" 9339541 | | NON STOCK |
| | 4" SDR 11 | 4" 9339534 | | NON STOCK |
| | 6" SDR 11 | 6" 9339733 | | NON STOCK |
| | 8" SDR 13.5 | 8" 9339559 | | NON STOCK |
| | 12" SDR 11.5 | 12" 9339560 | | NON STOCK |
| | **CAP END PLASTIC HIGH DENSITY BLACK BUTT FUSION** | | | |
| | 2" SDR 9 | 2" 9339538 | | NON STOCK |
| | 4" SDR 9 | 4" 9339535 | | NON STOCK |
| | 6" SDR 9 | 6" 9339536 | | NON STOCK |
| | 8" SDR 9 | 8" 9339537 | | NON STOCK |
| | 2" SDR 11 MASS RI & UNY | 2" 9312686 | | 2" 9312686 |
| | 3" SDR 11 MASS RI & UNY | 3" 9310276 | | 3" 9310276 |
| | 4" SDR 11 MASS RI & UNY | 4" 9312685 | | 4" 9312685 |
| | 6" SDR 11 MASS RI & UNY | 6" 9312684 | | 6" 9312684 |
| | 8" SDR 11 MASS RI | 8" 9310272 | | 8" 9310272 |
| | 12" SDR 11 RI UNY | NON STOCK | | 12" 9308729 |
| | 8" SDR 13.5 RI | NON STOCK | | 8" 9312683 |
| | 12" SDR 13.5 RI | NON STOCK | | 12" 9314665 |
| 5 | **McELROY TEST CAPS** (165 PSIG MAX) | NON STOCK | | NON STOCK |
| | 1-1/4" MODEL TP | TP-308 | | TP-308 |
| | 2" MODEL TP-310 | TP-310 | | TP-310 |
| 6 | **RISER** | - | | - |
| | 1" CTS MEDIUM DENSITY X ¼" NPT OUTLET | 9344366 | | NON STOCK |
| | 1" CTS MEDIUM DENSITY X 1-1/4" IPS OUTLET | 9346874 | | NON STOCK |
| | 1" HIGH DENSITY X 1-1/4" OUTLET | 9346853 | | NON STOCK |
| | 1" CST SERVASET X 1" OUTLET | 9322627 | | NON STOCK |
| | 1" CTS HIGH DENSITY .090" WALL X 1" IPS STEEL OUTLET | NON STOCK | | 9316405 |
| | ½" CTS .090" WALL PERFECTION END X ¼" NPT STEEL | NON STOCK | | 9310295 |
| | 1-1/4" CTS .095" WALL PERFECTION END X 1-1/4" NPT STEEL | NON STOCK | | 9306180 |
| | OR TEST CAPS WITH STEEL OR PLASTIC PIPE TO TEST TREE | 00311110 OR TOOL ROOM ITEM | | TOOL ROOM ITEM |
| | TEST CAP FOR CENTRAL PLASTIC ELECTROFUSE TAPPING TEE | - | | - |
| 7 | **FLANGE 150# WELD END FLAT FACE** | | | |
| | 2" | 9314322 | 2" | 9314322 |
| | 3" | 9314431 | 3" | 9314431 |
| | 4" | 9314430 | 4" | 9314430 |
| | 6" | 9308659 | 6" | 9308659 |
| | 8" | 9308748 | 8" | 9308748 |
| | 12" | 9308660 | 12" | 9308660 |
| | 16" | 9322363 MA | 16" | NON STOCK |
| | 20" | 9322362 MA | 20" | NON STOCK |
| 8 | **BLIND FLANGE CLASS 150# ASTM A-105** | | | |
| | 2" FLAT FACE WITH ¼" CENTER NPT TAP | 9341434 | 2" | NON STOCK |
| | 3" FLAT FACE WITH ¼" CENTER NPT TAP | 9341614 | 3" | NON STOCK |
| | 4" FLAT FACE WITH ¼" CENTER NPT TAP | 9341435 | 4" | NON STOCK |
| | 6" FLAT FACE WITH ¼" CENTER NPT TAP | 9340942 | 6" | NON STOCK |
| | 2" FLAT FACE | 9352074 | 2" | 9308652 |
| | 3" FLAT FACE | 9307751 | 3" | 9307751 |
| | 4" FLAT FACE | 9306252 | 4" | 9306252 |
| | 6" FLAT FACE | 9385747 | 6" | 9306518 |
| | 8" FLAT FACE | 9307750 | 8" | 9307750 |
| | 12" FLAT FACE | 9308749 | 12" | 9308749 |
| 9 | **GASKETS** | | | |
| | 2" FULL FACE 150# | 9331167 | 2" | 9315688 |
| | 3" FULL FACE 150# | 9341158 | 3" | 9312067 |
| | 4" FULL FACE 150# | 9341159 | 4" | 9312569 |
| | 6" FULL FACE 150# | 9332599 | 6" | 9312568 |
| | 8" FULL FACE 150# | 9341168 | 8" | 9315689 |
| | 12" RING TYPE 150# | 9341165 | 12" | NON STOCK |

UNCONTROLLED WHEN PRINTED
Effective Date 7/15/2013 CS-MAIN004


© National Grid Gas plc 2021 – All Rights Reserved

| ITEM | DESCRIPTION | ORACLE ITEM ID LI / MA / NYC | | PEOPLESOFT ITEM RI AND UNY |
|---|---|---|---|---|
| 10 | **END CAPS – STEEL WELD END STANDARD WALL –GRADE B** | | | |
| | 2" | 9312095 | 2" | 9312095 |
| | 3" | 9308719 | 3" | 9308719 |
| | 4" | 9312096 | 4" | 9312096 |
| | 6" | 9312094 | 6" | 9312094 |
| | 8" | 9312093 | 8" | 9312093 |
| | 10" | 9315182 | 10" | 9315182 |
| | 12" | 9312092 | 12" | 9312092 |
| | 16" | 9314824 | 16" | 9314824 |
| | 20" | 9339657 | 20" | 9314823 |
| 11 | **THOR FITTING** | - | | - |
| | ½" MALE NPT X HOSE CONNECTION | 00564089 | | NON STOCK |
| | ¾" FEMLALE X HOSE CONNECTION | 00564301 | | NON STOCK |
| 12 | **THRED-O-LET** | - | | - |
| | 12" – 8" X ¼" 3000# PER ASTM A-105 GRADE B | 9341652 12-8X3/4 | | NON STOCK |
| | 10" – 6" X 1" 3000# PER ASTM A-105 GRADE B | 9341655 10-6X1 | | NON STOCK |
| | 36" – 12" X 1" 3000# PER ASTM A-105 GRADE B | 9342052 36-12X1 | | NON STOCK |
| | 2" X 1" 3000# PER ASTM A-105 GRADE B | NON STOCK | | 9307678 2X1 |
| | 10" – 6" X 1" 3000# PER ASTM A-105 GRADE B | NON STOCK | | 9307695 10-6X1 |
| | 36"–14" X ¾" 3000# PER ASTM A-105 GRADE B | NON STOCK | | 9307677 36-14X3/4 |
| 13 | **VALVE** | | | |
| 13A | **VALVE (OPTIONAL – TO SHUT OFF TEST ASSEMBLY)** | | | |
| 14 | **LUG ASSEMBLY** | | | |
| | 7/8" x 24" LONG (LI ONLY - SEE MAIN-6219) | 9342211 | | NON STOCK |
| | 7/8"X 44"LONG (LI ONLY - SEE MAIN-6219) | 9342212 | | NON STOCK |
| | LUG GREEN 3" - 8" MAIN 7/8" DIAM. (NYC ONLY – SEE MAIN-6230 & MAIN-6236) | 9357904 | | NON STOCK |
| | LUG YELLOW 10"- 30" MAIN 1 1/16" DIAM. (NYC ONLY – SEE MAIN-6230& MAIN-6230) | 9357905 | | NON STOCK |
| | ROD ½" X 12" LONG (NYC ONLY | 9328152 | | NON STOCK |
| | ROD 1" X 12" LONG (NYC ONLY) | 9328150 | | NON STOCK |
| | LUG ASSEMBL 1" X 24 30" LONG | NON STOCK | | 9315741 |
| 15 | **COUPLING – END 2" PERFECTION** | NON STOCK | | 0803641 |
| 16 | **TEST CAP** | - | | TOOL ROOM ITEM |
| | FOR SADDLE FUSION TEE – CENTRAL PLASTICS | 9325109 | | |
| | FOR SADDLE FUSION TEE—JM EAGLE / POLY / UPONOR | 9325917 | | |
| | FOR SADDLE FUSION TEE - PERFORMANCE PIPE TEES | 9341368 | | |
| | FOR HVTT (HIGH VOLUME TAPPING TEE) SADDLE FUSION CENTAL PLASTICS | 9384268 | | |
| | FOR HVTT (HIGH VOLUME TAPPING TEE) SADDLE FUSION– JM EAGLE / POLY/ UPONOR | 9384174 | | |
| | FOR HVTT (HIGH VOLUME TAPPING TEE) SADDLE FUSION PERFORMANCE PIPE TEES | 9323715 | | |
| | FOR HVTT ELECTROFUSION TEE | 9382494 | | |
| | FOR ELECTROFUSION TEE | 9381846 | | |
| | FOR PERFECTION PMTT MECHANICAL TEE (CAP FITS ALL MAIN SIZE & OUTLET SIZES OF PMTTS) | 9338661 | | |

UNCONTROLLED WHEN PRINTED
Effective Date 2/15/2021


© National Grid Gas plc 2021 – All Rights Reserved
CS-MAIN004

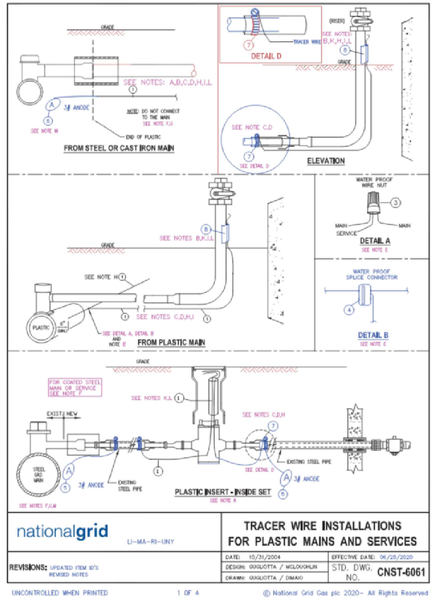


nationalgrid — LI–MA–RI–UNY

**TRACER WIRE INSTALLATIONS FOR PLASTIC MAINS AND SERVICES**

DATE: 10/25/2004 — EFFECTIVE DATE: 06/25/2020
DESIGN: GUGLIOTTA / MCLOUGHLIN
DRAWN: GUGLIOTTA / DIMAIO
STD. DWG. NO. **CNST-6061**

**REVISIONS:** UPDATED ITEM ID'S REVISED NOTES


© National Grid Gas plc 2020– All Rights Reserved

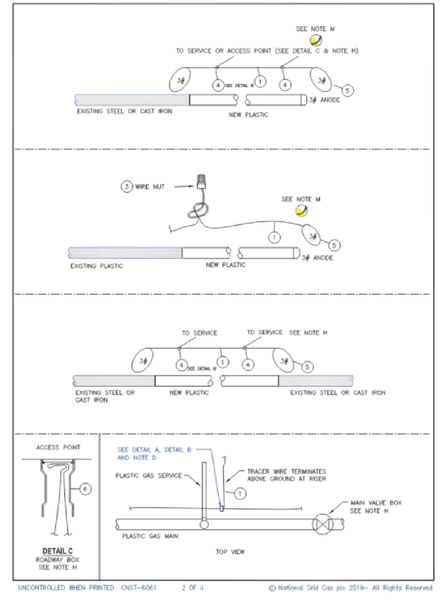



© National Grid Gas plc 2019– All Rights Reserved

| | | LI/NYC/ MASS | UNY/RI |
|---|---|---|---|
| 8 | TRACER WIRE SNAP, 2" (represents steel size) | 9386134 | 9386134 |
| 8 | TRACER WIRE SNAP, 1 ½" (represents steel size) | 9386156 | 9386156 |
| 8 | TRACER WIRE SNAP, 1" (represents steel size) | 9386150 | 9386150 |
| 8 | TRACER WIRE SNAP, ¾" (represents steel size) | 9385566 | 9385566 |
| 7 | CLAMP, STAINLESS | 9331708 | 9307873 |
| 6 | VALVE BOX, ROADWAY | 9339890 | 9312344 UNY 9311208 RI |
| 5 | ANODE, 3 LB MAGNESIUM | 9315645 | 9315645 |
| 4 | WIRE SPLICE CONNECTOR, WATERPROOF | 9308636 | 9308636 |
| 3 | WIRE NUT, PLASTIC, WATERPROOF | 9331644 | 9314631 |
| 2 | WIRE, DIRECTIONAL DRILL, STAINLESS, STRANDED 10 AWG | 9314187 | 9314187 |
| 1 | TRACER WIRE, DIRECT BURY, COPPER, 12 AWG | 9315005 | 9315005 |
| NO. | ITEM | SAP ITEM ID | |
| | BILL OF MATERIAL | | |

**A. Inside sets:** Terminate tracer wire in the curb valve box. Allow enough wire to extend 18" to 24" above grade.

**B. Outside Sets:** Tracer wire should be extended approximately 18" above grade at riser. Connect tracer wire to the riser using a "tracer snap", Item #8. If the appropriate tracer snap is not available, wrap or tie the tracer wire to the riser. Do not permanently attach tracer wire to the riser. Tracer wire should not exceed 6" above the point where it is secured to the riser.

**C. Partially tubed services:** When the abandoned portion of an existing steel service pipe is used as a sleeve for the new plastic, all cut out sections of the steel pipe to be inserted with plastic, shall be connected using a section of tracer wire to maintain continuity. If the existing service is coated steel , see Installation of Test Stations for Cathodic Protection [030026-CS] and Installation of Test Stations for Cathodic Protection [CORP04003] or contact corrosion department for more guidance.

**D.** Thermite welding of tracer wire to abandoned steel service is only acceptable prior to insertion of the plastic tubing. See Installation of Test Stations for Cathodic Protection [030026-CS].

**E. Plastic Mains:** The service tracer wire shall be connected to the plastic main tracer wire using item #3 detail A or item #4 (detail B - preferred) in accordance with Installing Wire Connections [CORP04004].

**F. Coated Steel Mains:** Do not connect the tracer wire to the steel main. See Installation of Test Stations for Cathodic Protection [030026-CS] and Installation of Test Stations for Cathodic Protection [CORP04003] or contact corrosion department for more guidance.

**G. Cast Iron or Bare steel Mains**: Do not connect the tracer wire to the main. It is required in LI and MA, and suggested in all other areas to terminate the tracing wire with a 3# anode.

**Tracer Wire Installation Notes**

H. Install tracer wire in close proximity to the plastic pipe. Approximately 4" to 6" away from the pipe. LI & MA- Above or alongside, UNY- alongside, RI-Under or alongside. Exception: For trenchless pipe installations, the minimum clearance is waived.

I. Maintain separation of approximately 4" from service riser. Do not permanently connect the tracer wire to the riser.

J. For horizontal directional drill installations, use stainless wire, Item #2.



K. Tracer wire installed in boxes should allow enough wire to extend 18" to 24" above grade.

L. Verification: upon completion, the installer shall verify the location of the main or service using the tracer wire and locating device and perform a mark out using the conductive method.

M. LI and MA: Required to terminate the tracing wire with a 3# anode. This is to ground the tracer wire and increase signal strength when locating. This practice is recommended in all areas where signal strength is an issue.

**Regional Notes**

NYC ONLY: refer to Installation of Marker Tapes and EM5 Pipeline Locators for Mains and Services [CNST6060-NYC] for installation of electronic marker ball in place of tracer wire.

UNCONTROLLED WHEN PRINTED
Effective Date 06/25/2020


© National Grid Gas plc 2020 – All Rights Reserved
CNST-6061

TRC — 215 GREENFIELD PARKWAY SUITE 102 LIVERPOOL, N.Y. 13088

NOT TO SCALE

COMMONWEALTH OF MASSACHUSETTS — DANIEL D'ELETTO CIVIL No. 55061 REGISTERED PROFESSIONAL ENGINEER
Daniel D'Eletto, P.E. 2023.05.12 16:13:15-04'00'
SIGN & DATE

| NO. | DESCRIPTION | DATE | DR.BY | CK.BY | APP.BY |
|---|---|---|---|---|---|
| 1 | REVISED NOTES, ADDED PTTCP, VALVE BOX STANDARD, & CALLOUTS | 05/12/2023 | PL | JNS | DD |
| 0 | ISSUED FOR CONSTRUCTION | 05/04/2023 | JRS | JNS | DD |

nationalgrid
170 DATA DRIVE
WALTHAM, MA 02451

FINAL

NBRESENT PROGRAM
INSTALL 4" PL (25 PSIG)
56 SHAW RD
BELMONT, MASSACHUSETTS

STANDARD DETAILS

| DWG SIZE | DESIGNER | ENGINEER | DATE: | ASSET I.D. | W.O. NO.: |
|---|---|---|---|---|---|
| 24"X36" | J.R. SMITH | D. D'ELETTO | 05/04/2023 | XXXXXXXXXXX | 1532089 |

PAGE 6 OF 7

DRAWING NO.

NBR–BEL–1532089 C–201

# Typical Utility Crossing and Trench Guidelines

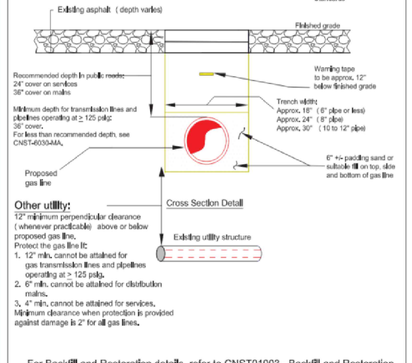


**Other utility:**
12" minimum perpendicular clearance ( whenever practicable) above or below proposed gas line.
Protect the gas line in:
1. 12" min. cannot be attained for gas transmission lines and pipelines operating at > 125 psig.
2. 6" min. cannot be attained for distribution mains.
3. 4" min. cannot be attained for services.
Minimum clearance when protection is provided against damage is 2" for all gas lines.

For Backfill and Restoration details, refer to CNST01003 - Backfill and Restoration

nationalgrid — MASS.

**TYPICAL UTILITY CROSSING AND TRENCH GUIDELINES**

Key Changes: REV 0 — NEW STANDARD FOR MASS.

DATE: 09/15/2014 | EFFECTIVE DATE: 04/05/2019
DESIGN: PAUL GUGLIOTTA | DRAWN: N. COSTANZO
STD. DWG. NO. CS-CNST002-MA

UNCONTROLLED WHEN PRINTED — 1 OF 1 — © National Grid Gas plc 2019– All Rights Reserved

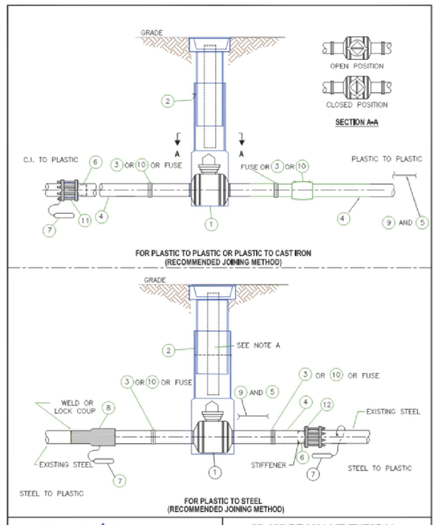


nationalgrid — ALL REGIONS

**2"-12" PE VALVE TYPICAL INSTALLATION**

REVISIONS: UPDATED ITEM 10'S.

DATE: 07/01/2003 | EFFECTIVE DATE: 06/09/2020
DESIGN: AJC / MAM | DRAWN: P. DIMINO
STD. DWG. NO. VALV-6020

UNCONTROLLED WHEN PRINTED — 1 OF 2 — © National Grid Gas plc 2020– All Rights Reserved

NOTES:
A. IN DNV LI REGION, INSTALL A LENGTH OF 2" DIAMETER PE OR SMALLER TUBING IN THE VALVE BOX TO IDENTIFY THE VALVE AS PLASTIC.
B. INSTALL TRACER WIRE OR BALL MARKERS AS REQUIRED IN YOUR REGION FOR PE INSTALLATIONS.
C. NOT USED ON THE DNV LI 99 & 124 PSI PE SYSTEM.
D. REFER TO REGIONAL STANDARDS FOR MATERIAL IDS NOT GIVEN BELOW.

| No. | ITEM | SAP ID | SAP ID | SAP ID |
|---|---|---|---|---|
| 1 | VALVE, PE (PORT CONFIGURATION AS NOTED) | **UNY AND RI**<br>**LP TO 100 PSIG HD**<br>9311203 12" DR 11 FULL PORT W/ GEAR OPERATOR **RI ONLY**<br>9307909 12" DR 13.5 FULL PORT W/ GEAR OPER **UNY ONLY**<br>9311173 8" DR 11 FULL PORT **RI ONLY**<br>9319189 8" DR 13.5 FULL PORT **UNY ONLY**<br>9312116 6" DR 11 FULL PORT<br>9312058 4" DR 11 FULL PORT<br>9308561 3" DR 11 FULL PORT **RI ONLY**<br>9312060 2" DR 11 FULL PORT<br>9311146 2" DR 11 FULL PORT WITH PERMASERT ENDS | **LI ONLY**<br>**99 AND 124 PSIG HD**<br>9341706 8" RED PORT DR 9<br>9341705 6" RED PORT DR 9<br>9341700 4" RED PORT DR 9<br>9341699 2" FULL PORT DR 9 | **LI, NYC AND NE**<br>**LP TO 60 PSIG MEDIUM DENSITY**<br>9341704 12" FULL PORT DR 13.5<br>9386584 8" FULL PORT DR 13.5<br>9323032 6" FULL PORT DR 11.5<br>9341703 4" FULL PORT DR 11.5<br>9323299 3" FULL PORT DR 11<br>9341794 2" FULL PORT DR 11<br>9341408 8" RED PORT DR 13.5<br>9341757 6" RED PORT DR 11.5<br>9341693 4" RED PORT DR 11.5<br>9341756 3" RED PORT DR 11<br>**100 PSIG HIGH DENSITY (NE ONLY)**<br>9323610 4" RED PORT DR 11<br>9323611 6" RED PORT DR 11<br>9323612 8" RED PORT DR 11<br>9312066 2" FULL PORT DR 11<br>9312056 4" FULL PORT DR 11<br>9312116 6" FULL PORT DR 11 |
| 2 | ROADWAY VALVE BOX WITH COVER | **SAP ID**<br>SELECT ROADWAY VALVE BOX BELOW TO MATCH SIZED VALVE GIVEN<br>SEE DWG FITS 6363 (FOR 12" VALVE)<br>6011208 (FOR 2" THRU 8" VALVE) | **SAP ID**<br>SELECT ROADWAY VALVE BOX BELOW TO MATCH SIZED VALVE GIVEN<br>9341706 8" RED PORT<br>9341705 6" RED PORT<br>9341700 4" RED PORT<br>9341699 2" FULL PORT | **SAP ID**<br>SELECT ROADWAY VALVE BOX BELOW TO MATCH SIZED VALVE GIVEN<br>9382626 FOR 12" FULL PORT<br>9382624 FOR 8" FULL PORT<br>9339893 FOR 6" FULL PORT<br>9339892 FOR 4" FULL PORT<br>9339890 FOR 3" FULL PORT<br>9339889 FOR 2" FULL PORT<br>9339893 FOR 8" RED PORT<br>9339892 FOR 6" RED PORT<br>9339891 FOR 4" RED PORT<br>9339891 FOR 3" RED PORT |
| 3 | COUPLING ELECTROFUSE | | | |
| 4 | PLASTIC PIPE | | | |
| 5 | BURIAL TAPE | | | |
| 6 | INSERT STIFFENER ( SEE NOTE C) | | | |
| 7 | ANODE, 17 LB | | | |
| 8 | TRANSITION FITTING STL TO PE | | | |
| 9 | TRACER WIRE OR (BALL MARKER IF USED IN REGION) | | | |
| 10 | COUPLING 2" PERFECTION PERMASERT ( SEE NOTE C) | | | |
| 11 | COUPLING, PE TO CI, LOCKING INSULATING, MECHANICAL | | | |
| 12 | COUPLING, PE TO STL, LOCKING, NON-INSULATING MECHANICAL ( SEE NOTE C) | | | |

UNCONTROLLED WHEN PRINTED — Effective Date 06/09/2020 — 2 OF 2 — © National Grid Gas plc 2020 – All Rights Reserved — VALV-6020

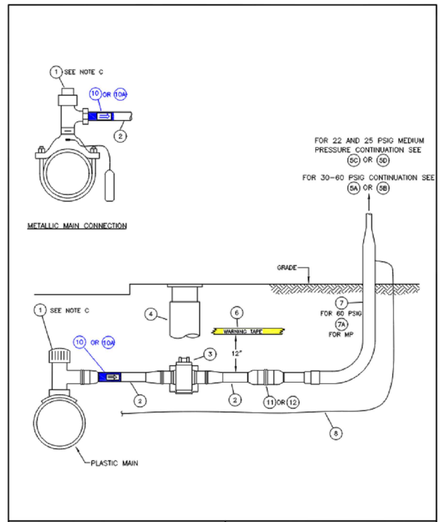


nationalgrid — MASSACHUSETTS

**1" 60 PSIG OR MEDIUM PRESSURE PLASTIC SERVICE WITH 1 AL-250 TC OR AL-425 TC METER**

REVISIONS: UPDATED SAP ID'S

DATE: 07/01/2003 | EFFECTIVE DATE: 3/07/2018
DESIGN: R. MALNAM | DRAWN: P. DIMINO
STD. DWG. NO. SERV-6078

SHT. 1 OF 2

NOTES:
A. THIS STANDARD IS FOR THE 60 PSIG AND MEDIUM PRESSURE SYSTEMS.
B. FOR INSTALLATION SPECIFICATIONS SEE CS-SERV005.
C. SELECT FROM ITEMS 1A THROUGH 1C DEPENDING ON THE TYPE OF MAIN.
D. FOR CURB VALVE REQUIREMENTS, SEE SERV-5100.
E. IF THE PREMISE LOAD EXCEEDS THE SPECIFIED EFV FLOW RATE, THEN A CURB VALVE MUST BE INSTALLED INSTEAD OF THE EFV FOR INSTALLATION SPECIFICATIONS, SEE APPLICABLE STANDARDS AND PROCEDURES.
F. INSTALL EFV IN SERVICE LINE USING APPROPRIATE SIZE FITTINGS.

| NO. | ITEM | | |
|---|---|---|---|
| 12 | COUPLING, E-FUSE, 1" CTS | | 9341454 |
| 11 | COUPLING, PERFECTION 1" | | 9341155 |
| 10A | EFV, 2500 CFH, 1" CTS PERMASERT COUPLING, UNIVERSAL .099/.090 WALL (SEE NOTES E & F) | | 9324745 |
| 10 | EFV, 2500 CFH, 1" CTS, .099 WALL, MD STICK, (SEE NOTES E & F) | | 9324572 |
| 9 | BRACKET DRIVEN POST OR BRACKET SIDING TYPE | POST<br>RISER<br>SIDING | 9323008<br>9313505<br>9322430 |
| 8 | TRACER WIRE | | 9334433 |
| 7A | RISER, METER SERVISERT, 1" MPT,1" OR EQUIV. MOPE, .099 SERVISERT ADAPTER FOR MEDIUM PRESSURE | | 9322627 |
| 7 | RISER, ANODELESS, 1" CTS .090 WALL, 1" MPT (FOR 60 PSIG) | | 9341366 |
| 6 | WARNING TAPE, 6" X 1000' | | 9341904 |
| 5D | METER SET PRE-FAB #4 BGC-IP-425, STD, DWG. MTRS-6905 | | 9324727 |
| 5C | METER SET PRE-FAB #3 BGC-IP-250, STD, DWG. MTRS-6904 W/ BYPASS | | 9347535 |
| 5B | METER SET PRE-FAB #2 BGC-HP-425, STD, DWG. MTRS-6908 | MASS<br>CAPE | 9324692<br>9324693 |
| 5A | METER SET PRE-FAB #1 BGC-HP-250, STD, DWG. MTRS-6900 | MASS<br>CAPE | 9324719<br>9324767 |
| 4 | VALVE BOX, 1/2" TO 1-1/4" SERVICE | | 9339888 |
| 3 | VALVE, PERFECTION OR EQUIV., 1" CTS | | 9341686 |
| 2 | PIPE, MDPE, 1" CTS, .099 | | 9341663 |
| 1C | SLEEVE, PROTECTION, 2-1/2" X 18", PVC | | 9342492 |
| | COUPLING, REDUCER, E-FUSE, 1" IPS X 1" CTS | | 9341488 |
| | TEE, E-FUSE, SELF TAPPING, 1" IPS (USE WITH ITEM 10 OR 10A) | 1-1/4"<br>2"<br>3"<br>4"<br>6"<br>8" | 9322631<br>9322653<br>9322608<br>9322620<br>9322608<br>9323457 |
| 1B | TEE, E-FUSE, SELF TAPPING, 1" CTS WITH PERFECTION END (USE WITH ITEM 10 OR 10A) | 2"<br>3"<br>4"<br>6"<br>8" | 9324486<br>9322628 & 9341488<br>9342143<br>9342172<br>9324461 |
| | SERVICE TEE, FUSION, TAPPING, MDPE, 1-1/4" CTS 0.090" WALL (MUST USE WITH ITEM ID 9341520 1-1/4" CTS .090" X 1" CTS .099 REDUCER COUPLING) | 1/2" | 9342181 |
| 1A | ANODE, 17#, MAXMAG, HI POTENTIAL OR EQUIV. | | 9311183 |
| | SADDLE/SERVICE, CONTINENTAL OR EQUIV., 1-1/8" O.D. .099 WALL FOR STEEL MAINS (USE WITH ITEM 10 OR 10A) | 2"<br>3"<br>4"<br>6"<br>8" | 9323046<br>9323045<br>9323036<br>9323071<br>9323073 |

SHT. 2 OF 2 SERV-6078

UNCONTROLLED WHEN PRINTED — Effective Date 06/15/2020 — 1 OF 1 — © National Grid Gas plc 2019– All Rights Reserved

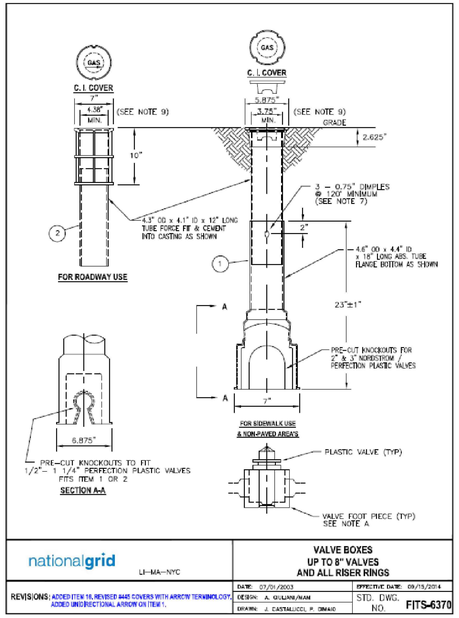


nationalgrid — LI–MA–NYC

**VALVE BOXES UP TO 8" VALVES AND ALL RISER RINGS**

REVISIONS: ADDED ITEM 16, REVISED #445 COVERS WITH ARROW TERMINOLOGY, ADDED UNIDIRECTIONAL ARROW ON ITEM 1.

DATE: 07/01/2003 | EFFECTIVE DATE: 09/15/2014
DESIGN: A. GULANAJNAM | DRAWN: J. CASTALLICO, P. DIMINO
STD. DWG. NO. FITS-6370

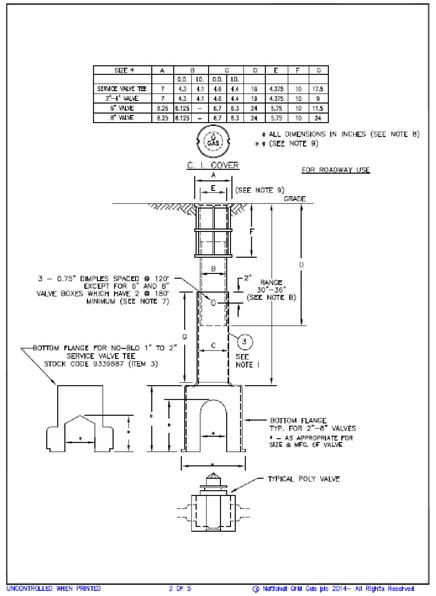


| SIZE * | A | B | C | D | E | F | G |
|---|---|---|---|---|---|---|---|
| | | O.D. | I.D. | I.D. | | | |
| SERVICE VALVE TEE | 7 | 4.3 | 4.1 | 4.6 | 4.4 | 19 | 4.375 | 10 | 17.5 |
| 2"–4" VALVE | 7 | 4.3 | 4.1 | 4.6 | 4.4 | 19 | 4.375 | 10 | 9 |
| 6" VALVE | 8.25 | 6.125 | – | 6.7 | 6.3 | 24 | 5.75 | 10 | 11.5 |
| 8" VALVE | 8.25 | 6.125 | – | 6.7 | 6.3 | 24 | 5.75 | 10 | 24 |

* ALL DIMENSIONS IN INCHES (SEE NOTE 8)
* # (SEE NOTE 9)

UNCONTROLLED WHEN PRINTED — 2 OF 5 — © National Grid Gas plc 2014– All Rights Reserved

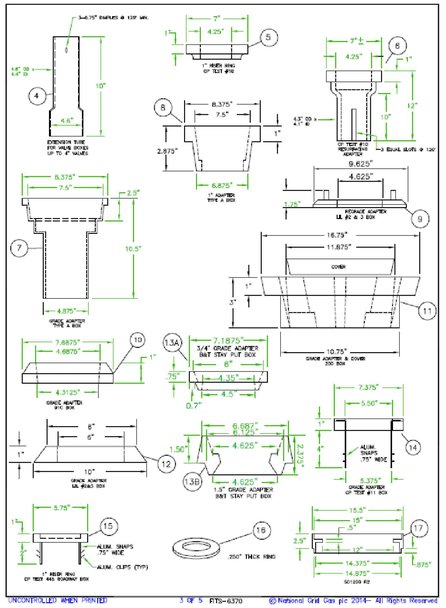


UNCONTROLLED WHEN PRINTED — 3 OF 5 — FITS–6370 — © National Grid Gas plc 2014– All Rights Reserved

**INSTALLATION NOTES:**

A. VALVE FOOT PIECE TO BE INSTALLED AROUND THE VALVE THEN INSERTED INTO THE BOTTOM FLANGE OF THE VALVE BOX.
B. THE RANGE OF THE VALVE BOX, FROM TOP OF GRADE TO TOP OF VALVE, IS 24" TO 36". FOR DEEPER VALVES USE EXTENSION TUBE STOCK CODE 00308023.
C. THESE BOXES CAN ALSO BE USED WITH THE APPROPRIATE SIZE STEEL VALVE. IF USED WITH A STEEL VALVE THE "VALVE FOOT PIECE" IS NOT TO BE USED; HOWEVER, PRIOR TO BACKFILLING INSTALL THE LOWER PORTION OF THE VALVE KEY ON THE VALVE OPERATING NUT. THEN PLACE THE LOWER SECTION OF THE BOX ON THE VALVE. WHEN THE BOTTOM SECTION IS BACKFILLED TO WITHIN 6" FROM ITS TOP REMOVE THE VALVE KEY & INSTALL THE TOP SECTION OF THE BOX.
D. ITEM 2 SHALL ONLY BE USED IN SIDEWALK AND NON-PAVED, NON TRAFFIC AREA EXCEPT DRIVEWAYS.
E. USE ITEM 1 ON MAIN LINE VALVES INSTALLED IN PAVED AND NON PAVED AREAS.
F. AFTER INSTALLATION OF MAIN LINE VALVE & BOX NOTIFY GSO OF COMPLETION.

**MANUFACTURING NOTES:**

1. ALL TOPS & BOTTOMS SHALL BE INTERCHANGEABLE.
2. THE TOP OF THE BOX ASSEMBLY SHALL BE FABRICATED SO AS TO FIT INSIDE THE BOTTOM SECTION.
3. MATERIAL SHALL CONFORM TO ASTM SPECIFICATIONS FOR GREY CAST IRON CASTINGS, DESIGNATED A48, CLASS 25.
4. COVER SHALL CREATE A TIGHT FIT WITH TOP OF CASTING TO PREVENT RATTLING. FOR CODES 00308054 & 00308055 COVER SHALL BE OF VENTED DESIGN. FOR OTHER STOCK CODES THE COVER SHALL INCLUDE A DIRECTIONAL ARROW. THIS SHALL BE DESIGNED TO ALLOW THE ARROW TO BE POSITIONED AT 60 INTERVALS.
5. ALL SURFACES SHALL BE COVERED WITH ONE COAT OF FLINTKOTE HYDALT PROTECTIVE COATING, C-13-E OR APPROVED EQUAL.
6. THE PLASTIC USED FOR THE TUBES SHALL BE PROTECTED FROM UV RAYS & AND HAVE THE PROPER INHIBITORS TO PROTECT FROM BRITTLENESS AT ZERO DEGREES.
7. DIMPLES SHALL BE FORMED SO AS TO EXERT ENOUGH PRESSURE ON INNER TUBE TO SUPPORT ENTIRE ASSEMBLY IN EXTENDED POSITION.
8. DIMENSIONAL TOLERANCES: MANUFACTURE SHALL ADHERE TO THE FOLLOWING DIMENSIONAL TOLERANCES ALL PLASTIC TUBING SHALL BE +/- 0.0187 TO THOSE SHOWN ON THE DRAWING. ALL CASTINGS SHALL BE MANUFACTURED TO WITHIN +/- 0.0625" TO THE DIMENSIONS SHOWN ON THE DRAWING.
9. DIMENSIONS SHALL BE CONSISTENT THROUGHOUT THE CASTING.
10. TOP SECTION OF VALVE BOX SHALL HAVE THE PLASTIC TUBE FORCED FIT AND CEMENTED INTO THE CASTING. THIS JOINT SHALL BE CAPABLE OF WITHSTANDING A PULL OUT FORCE OF 20 POUNDS.
11. MANUFACTURER SHALL SUBMIT SAMPLES TO THE ENGINEER FOR APPROVAL PRIOR TO BID ACCEPTANCE.
12. STREET BOXES SHALL BE DESIGNED TO HANDLE TO AN H-20 ROADWAY LOADING.
13. TOP FLANGE OF ROADWAY BOX SHALL BE FLAT AND WIDE ENOUGH TO ACCOMMODATE A 3/8" METAL NUMBER STAMP EMBEDDED INTO THE CASTING BY CKD IN THE FIELD.
14. THE VALVE FOOT RIECE SHALL BE DESIGNED TO FIT THE FOLLOWING MANUFACTURER'S VALVES.
    1/2"-1 1/2" - PERFECTION
    2" - NORDSTROM OR PERFECTION UNIVERSAL FOOT PC FOR BOTH MFG.
    4" - 8" NORDSTROM

UNCONTROLLED WHEN PRINTED — Effective Date 05/15/2014 — 4 OF 5 — © National Grid Gas plc 2014 – All Rights Reserved — FITS-6370

| No. | ITEM | N.G. CODE No. |
|---|---|---|
| | **BILL OF MATERIAL** | |
| 16 | PENTAGON KEY FOR ITEMS 8B AND 11B (NOT SHOWN) | 9354644 |
| 17 | 2" REGRADE ADAPTER FOR 12" LOCKING BOX 50/1200 R2 | 9354175 |
| 16 | VALVE BOX ADAPTER RING, 1/4 INCH THICK X 7-5/8 INCH I.D. X 10-1/2 IN O.D. FLAT RING TO RAISE OLD LEGACY OBSOLETE LILCO ROUND CASTINGS | 9353359 |
| 15 | ONE INCH GRADE ADAPTER & COVER FOR CP TEST#445 ROADWAY BOX - NH ONLY | 9353913 |
| * | REPLACEMENT COVER FOR LIL R2 BOX – LI ONLY<br>COVER MARKED "GAS" FOR 445 BOX (WITH UNIDIRECTIONAL ARROW)<br>COVER MARKED "GAS" FOR 445 BOX (WITHOUT UNIDIRECTIONAL ARROW)<br>COVER MARKED "GAS" FOR 4" STAY PUT BOX - NYC ONLY<br>COVER MARKED "GAS" FOR #11B BOX<br>COVER MARKED "GAS" FOR #50 BOX RESURFACE REPAIR, SLEEVE RING | 9339829<br>9339828<br>9355352<br>9339758<br>9339858<br>9339762 |
| 14 | 1" REGRADE ADAPTER WITH COVER FOR CP TEST # 11B BOX - SEE NOTE B | 9352611 |
| 13A<br>13B | 1/2" REGRADE ADAPTER FOR B&T STAY PUT SERVICE BOX WITH SLOTS NYC ONLY<br>1-1/2" REGRADE ADAPTER FOR B&T STAY PUT SERVICE BOX WITH SLOTS NYC ONLY | 9339800<br>9339726 |
| 12<br>* | 1" REGRADE ADAPTER FRAME FOR THE LILIP 2 & 3 VALVE BOX,<br>COVER FOR ABOVE (NOT SHOWN) - LI ONLY | 9339869<br>9339860 |
| 11B | COVER, REPLACEMENT, LOCKING, MARKED "GAS" FOR EXISTING LOCK TYPE 200 BOX, WITH PENTHEAD BOLT - LI ONLY (NOT SHOWN) | 9354328 |
| 11A | COVER, REPLACEMENT, NON-LOCK, MARKED "GAS" FOR EXISTING NON-LOCK TYPE 200 BOX - LI ONLY (NOT SHOWN) | 9339798 |
| 11 | 1" REGRADE ADAPTER FRAME & COVER FOR 200 VALVE BOX - LI ONLY | 9339826 |
| * | 2-1/2" REGRADE ADAPTER FOR 200 VALVE BOX, FITS EXISTING COVER, (NOT SHOWN) - LI ONLY | 9339799 |
| 10 | 1" REGRADE ADAPTER & COVER FOR 910 BOX - LI ONLY | 9339761 |
| 9 | 1 1/2" REGRADE ADAPTER FOR LIL 2&3 BOX - LI ONLY | 9339758 |
| 8B | COVER, REPLACEMENT, LOCKING, MARKED "GAS" FOR 7-1/2" EXISTING TYPE "A" LOCK VALVE BOXES, WITH PENTHEAD BOLT - LI ONLY (NOT SHOWN) | 9339780 |
| 8A | COVER, REPLACEMENT, MARKED "GAS" FOR 7-1/2" EXISTING TYPE "A" NON-LOCK VALVE BOXES AND ALL TYPE "A" ADAPTER RINGS - LI ONLY (NOT SHOWN) | 9354430 |
| 8 | 1" REGRADE ADAPTER FOR TYPE "A" VALVE BOX, FITS EXISTING COVER, - LI ONLY | 9339827 |
| 7 | 2-1/2" REGRADE ADAPTER FOR TYPE "A" VALVE BOX, 2-1/2 IN MIN TO 8 IN MAX RISE, FITS EXISTING COVER, - LI ONLY | 9339763 |
| 6 | 1" REGRADE ADAPTER RING EXTENSION WITH 10" PLASTIC SKIRT TO REPAIR TOPS OF CP TEST #10 BOX | 9351427 |
| 5 | 1" REGRADE ADAPTER FOR CP TEST #10 BOX | 9339823 |
| 4 | EXTENSION TUBE - FOR CP TEST#11 BOX<br>EXTENSION TUBE - FOR CP TEST #10 BOX | 9352619<br>9339824 |
| - | EXTENSION TUBE, FOR CP TEST #589 BOX, 18" LONG – (NOT SHOWN) - NE ONLY<br>EXTENSION TUBE, FOR CP TEST #334 BOX, 24" LONG – ( NOT SHOWN) – NE ONLY | 9353129<br>9353128 |
| 3 | ROADWAY BOX ASSEMBLY AND COVER FOR 6" POLYVALVE CP TEST #11B OR APPV'D EQUAL<br>ROADWAY BOX ASSEMBLY AND COVER FOR 6" POLYVALVE CP TEST #18 OR APPV'D EQUAL<br>ROADWAY BOX ASSEMBLY AND COVER FOR 4" POLYVALVE CP TEST #10 OR APPV'D EQUAL<br>ROADWAY BOX ASSEMBLY AND COVER FOR 2" AND 3" POLYVALVE CP TEST #10 OR APPV'D EQUAL<br>ROADWAY BOX ASSEMBLY AND COVER FOR 1"-2" MUELLER SERVICE VALVE TEE CP TEST #10 OR APPV'D EQUAL | 9339893<br>9339892<br>9339891<br>9339890<br>9339887 |
| 2 | ROADWAY SERVICE BOX AND COVER FOR ½" TO 1" PLASTIC VALVE NE ONLY CP TEST #10 OR APPV'D EQUAL | 9352767 |
| 1 | SIDEWALK VALVE BOX ASSEMBLY AND UNIDIRECTIONAL ARROW COVER FOR ½" TO 1 ¼" PLASTIC VALVES CP TEST #445 OR APPV'D EQUAL<br>SIDEWALK VALVE BOX ASSEMBLY AND UNIDIRECTIONAL ARROW COVER FOR 2" TO 3" PLASTIC VALVES CP TEST #445 OR APPROVED EQUAL | 9339856<br>9339859 |

UNCONTROLLED WHEN PRINTED — Effective Date 09/15/2014 — 5 OF 5 — © National Grid Gas plc 2014 – All Rights Reserved — FITS-6370

TRC — 215 GREENFIELD PARKWAY, SUITE 102, LIVERPOOL, N.Y. 13088

NOT TO SCALE

COMMONWEALTH OF MASSACHUSETTS — DANIEL D'ELETTO CIVIL No. 55061 — REGISTERED PROFESSIONAL ENGINEER

Daniel D'Eletto, P.E. 2023.05.12 16:13:17-04'00'
SIGN & DATE

| NO. | DESCRIPTION | DATE | DR.BY | CK.BY | APP.BY |
|---|---|---|---|---|---|
| 1 | REVISED NOTES, ADDED PTTCP, VALVE BOX STANDARD, & CALLOUTS | 05/12/2023 | PL | JNS | DD |
| 0 | ISSUED FOR CONSTRUCTION | 05/04/2023 | JRS | JNS | DD |

nationalgrid — 170 DATA DRIVE, WALTHAM, MA 02451

FINAL

NBRESENT PROGRAM
INSTALL 4" PL (25 PSIG)
56 SHAW RD
BELMONT, MASSACHUSETTS

## STANDARD DETAILS

| DWG SIZE | DESIGNER | ENGINEER | DATE: | ASSET I.D. | W.O. NO.: |
|---|---|---|---|---|---|
| 24"X36" | J.R. SMITH | D. D'ELETTO | 05/04/2023 | XXXXXXXXXXX | 1532089 |



DRAWING NO.
NBR–BEL–1532089 C–202