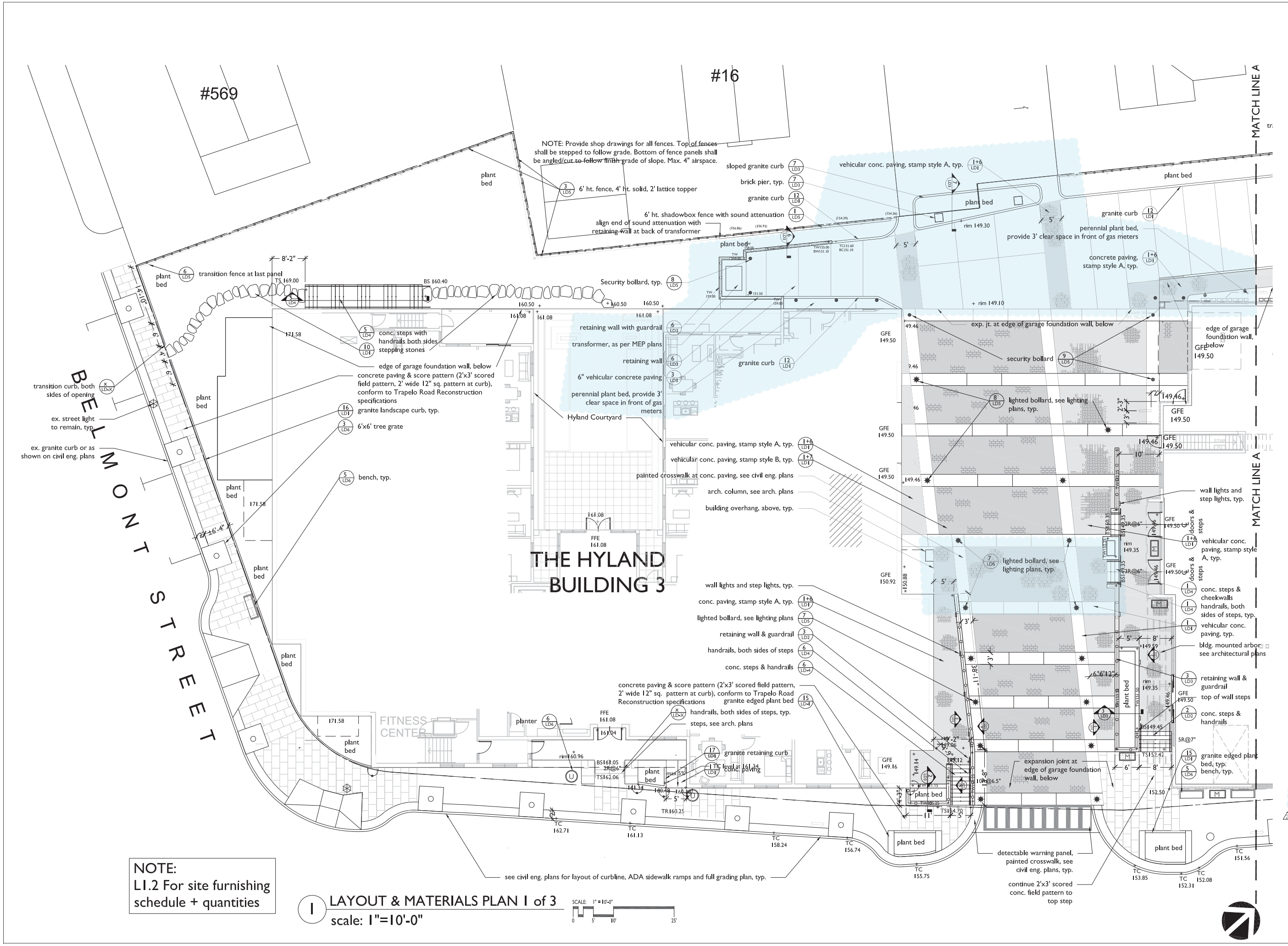

NOTE:
L1.2 For site furnishing schedule + quantities

1 LAYOUT & MATERIALS PLAN 1 of 3
scale: 1"=10'-0"

Y:\Cushing Square\CAD\BRAD MAT_L1.0.dwg

PETER QUINN ARCHITECTS
ARCHITECTURE
PLANNING
COMMUNITY DESIGN

PETER QUINN ARCHITECTS LLC
259 ELM ST, SUITE 301
SOMERVILLE MA 02144
PH 617-354-3989 FAX 617-868-0280

SEAL

CONSULTANT

VERDANT LANDSCAPE ARCHITECTURE
338 Harvard Street, Suite 26, Brookline, MA 02446
Verdant Landscape Architecture.com
617.735.1180

CONSULTANT

PROJECT
THE BRADFORD
BELMONT, MA

PREPARED FOR
Toll Brothers
BELMONT RESIDENTIAL, LLC
BELMONT RESIDENTIAL, LLC
NEEDHAM, MA

DRAWING TITLE
Layout & Materials Plan

SCALE AS NOTED

REVISION	DATE
Definitive Plan Set	AUG. 31, 2017
GARAGE SET	AUG. 15, 2017
DEFINITIVE PLAN	AUG. 15, 2017

DRAWN BY	REVIEWED BY
KP	BH

SHEET
L1.0
2

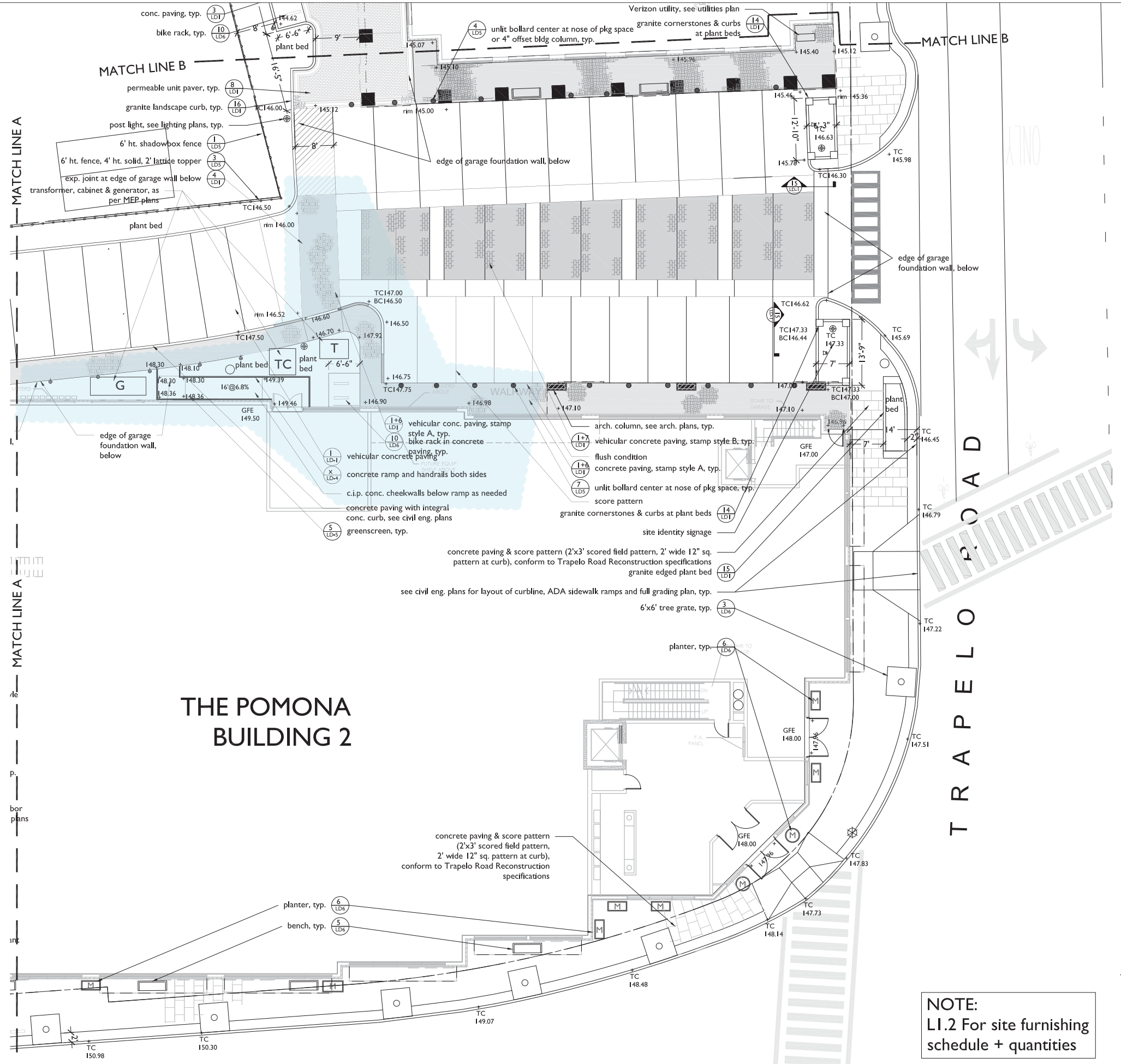

1 LAYOUT & MATERIALS PLAN 2 of 3
scale: 1"=10'-0"

NOTE:
L1.2 For site furnishing schedule + quantities

PETER QUINN ARCHITECTS
ARCHITECTURE PLANNING COMMUNITY DESIGN
PETER QUINN ARCHITECTS LLC
259 ELM ST, SUITE 301
SOMERVILLE MA 02144
PH 617-354-3989 FAX 617-868-0280

SEAL

CONSULTANT
VERDANT LANDSCAPE ARCHITECTURE
888 Harvard Street, Suite 26, Brookline, MA 02446
Verdant Landscape Architecture.com
617.735.1180

CONSULTANT

PROJECT
THE BRADFORD
BELMONT, MA

PREPARED FOR
Toll Brothers
BELMONT RESIDENTIALS, LLC
BELMONT RESIDENTIAL, LLC
NEEDHAM, MA

DRAWING TITLE
Layout & Materials Plan

SCALE AS NOTED

REVISION	DATE
Definitive Plan Set	AUG. 31, 2017
GARAGE SET	AUG. 15, 2017
DEFINITIVE PLAN	AUG. 15, 2017

DRAWN BY	REVIEWED BY
KP	BH

SHEET
L1.1
2

Y:\Cushing Square\CAD\BRAD MAT_LO.dwg

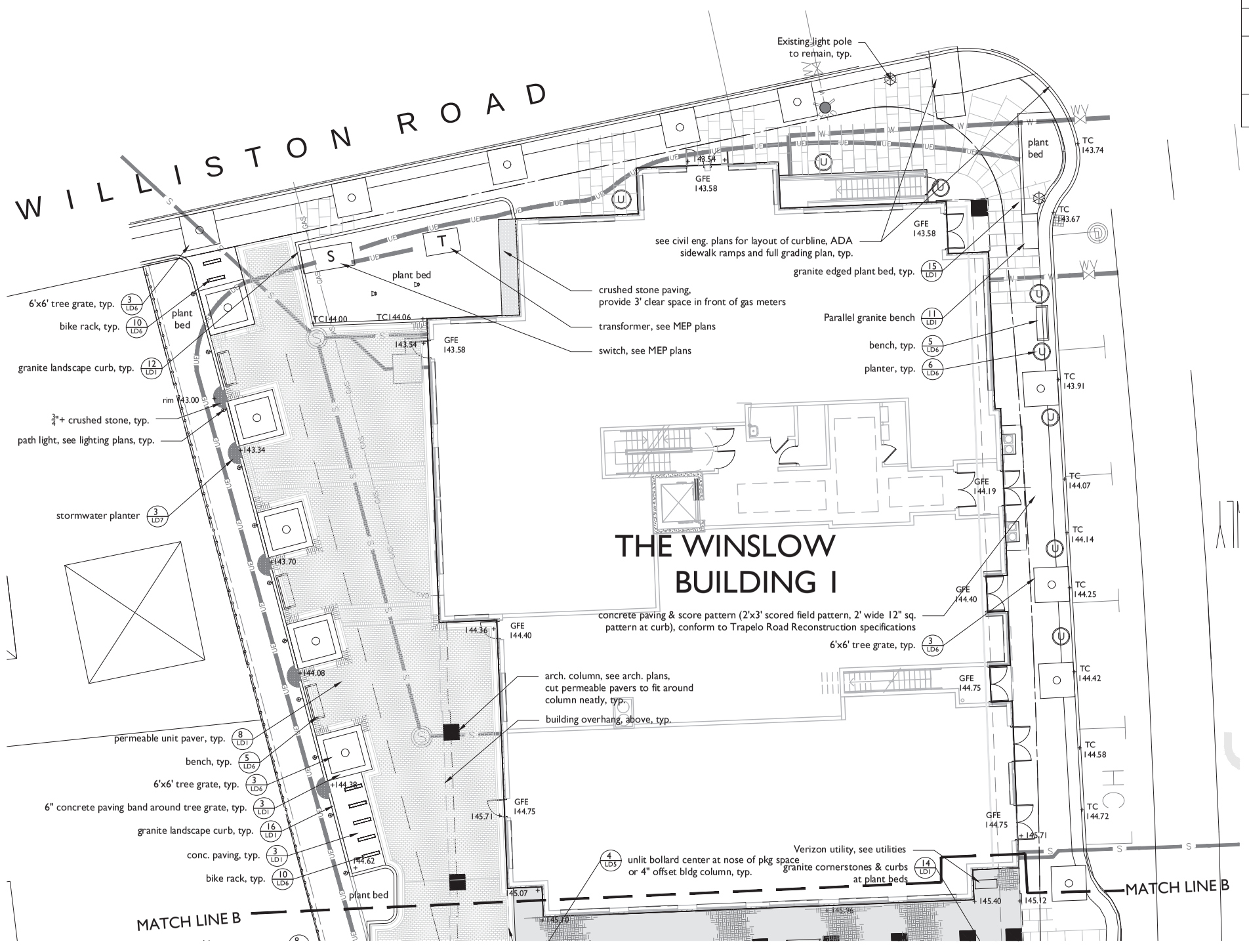

1 LAYOUT & MATERIALS PLAN 3 of 3
scale: 1"=10'-0"

Site Furnishings Legend:

SYM.	ITEM	QTY.
	lighted bollard and unlit bollard "Light Column Bollard" by Forms & Surfaces	16 & 18
	security bollard with cover by Idealshield	X
	"Bench 160" by Dumor, Inc.	12
M	'Metro' style, FRP planter, 2'x4', by Tournesol Siteworks	11
M	'Metro' style, FRP planter 3' dia., by Tournesol Siteworks	2
U	'Urban' style, FRP planter 3' dia., by Tournesol Siteworks	8
	8' x 8' #5105 greenscreen panel by greenscreen	8
	6' x 6' tree grate, 'Kiva' by Urban Accessories	29
	bicycle rack, 'Arc' by Dero	13

PETER QUINN ARCHITECTS
ARCHITECTURE
PLANNING
COMMUNITY DESIGN

PETER QUINN ARCHITECTS LLC
259 ELM ST, SUITE 301
SOMERVILLE MA 02144
PH 617-354-3989 FAX 617-868-0280

SEAL

CONSULTANT
VERDANT LANDSCAPE ARCHITECTURE
617.738.1180

CONSULTANT

PROJECT
THE BRADFORD
BELMONT, MA

PREPARED FOR
Toll Brothers
BELMONT RESIDENTIAL, LLC
BELMONT RESIDENTIAL, LLC
NEEDHAM, MA

DRAWING TITLE
Layout & Materials Plan

SCALE AS NOTED

REVISION	DATE
GARAGE SET	AUG. 15, 2017
DEFINITIVE PLAN	AUG. 15, 2017

DRAWN BY KP
REVIEWED BY BH

SHEET
L1.2
2

y:\cushing square\CAD\BRAD MAT_LO.dwg

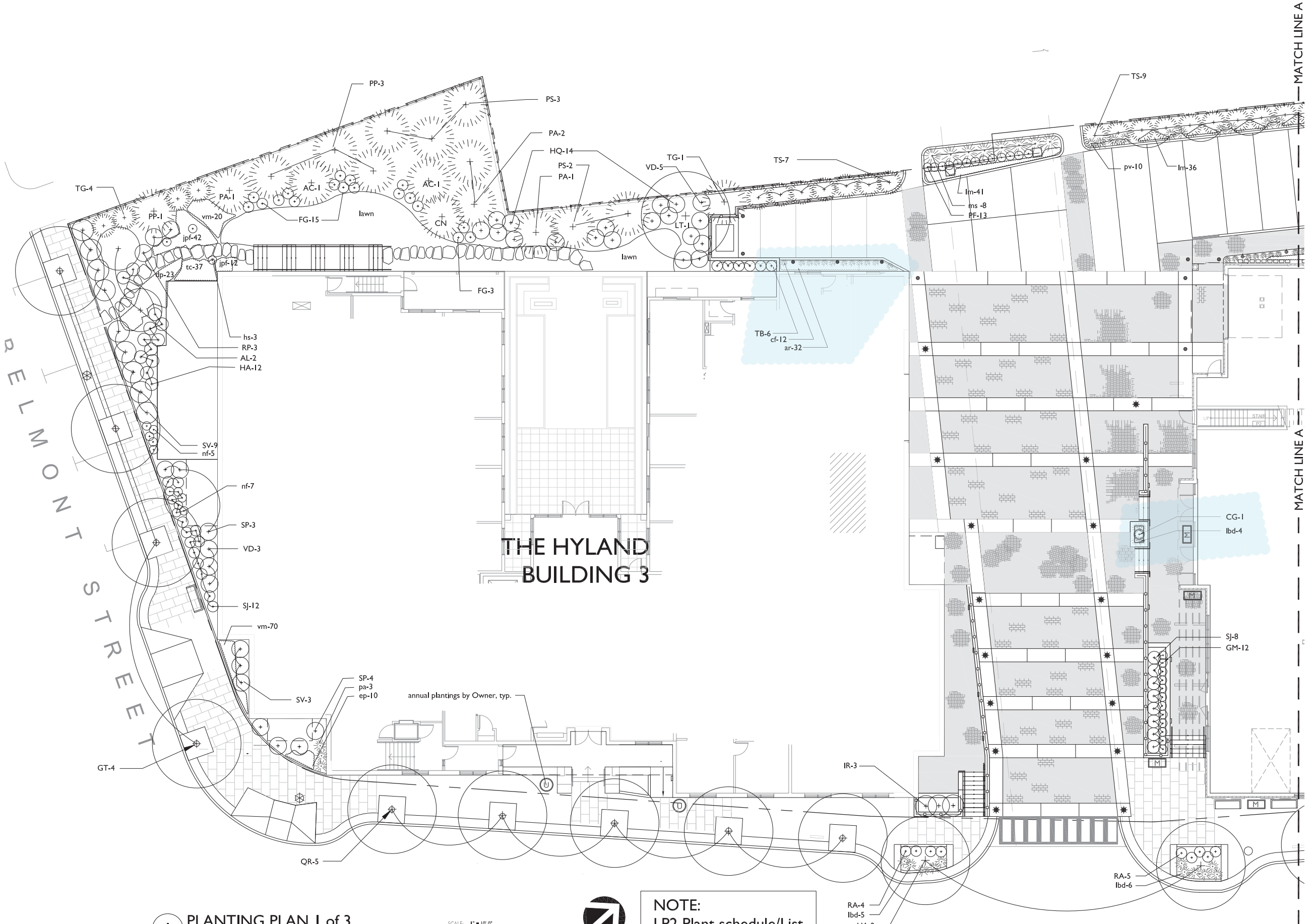

1 PLANTING PLAN 1 of 3
scale: 1"=10'-0"

SCALE: 1" = 10'-0"
0 5' 10' 25'

NOTE:
LP2 Plant schedule/List
LP2 Planting Notes
LP3 Planting Details

Y:\Cushing Square\CAD\BRAD_PLANT.dwg

PETER QUINN ARCHITECTS
ARCHITECTURE
PLANNING
COMMUNITY DESIGN

PETER QUINN ARCHITECTS LLC
259 ELM ST, SUITE 301
SOMERVILLE MA 02144
PH 617-354-3989 FAX 617-868-0280

SEAL

CONSULTANT

VERDANT
LANDSCAPE ARCHITECTURE
3135 Harvard Street, Suite 3B, Brookline, MA 02446
Verdant Landscape Architecture.com
617.735.1180

CONSULTANT

PROJECT
THE BRADFORD
BELMONT, MA

PREPARED FOR
Toll Brothers
BELMONT RESIDENTIALS, LLC
BELMONT RESIDENTIAL, LLC
NEEDHAM, MA

DRAWING TITLE
Planting Plan

SCALE AS NOTED

REVISION	DATE
Definitive Plan Set	AUG. 31, 2017
GARAGE SET	AUG. 15, 2017
DEFINITIVE PLAN	AUG. 15, 2017

DRAWN BY	REVIEWED BY
KP	BH

SHEET
LP1
2

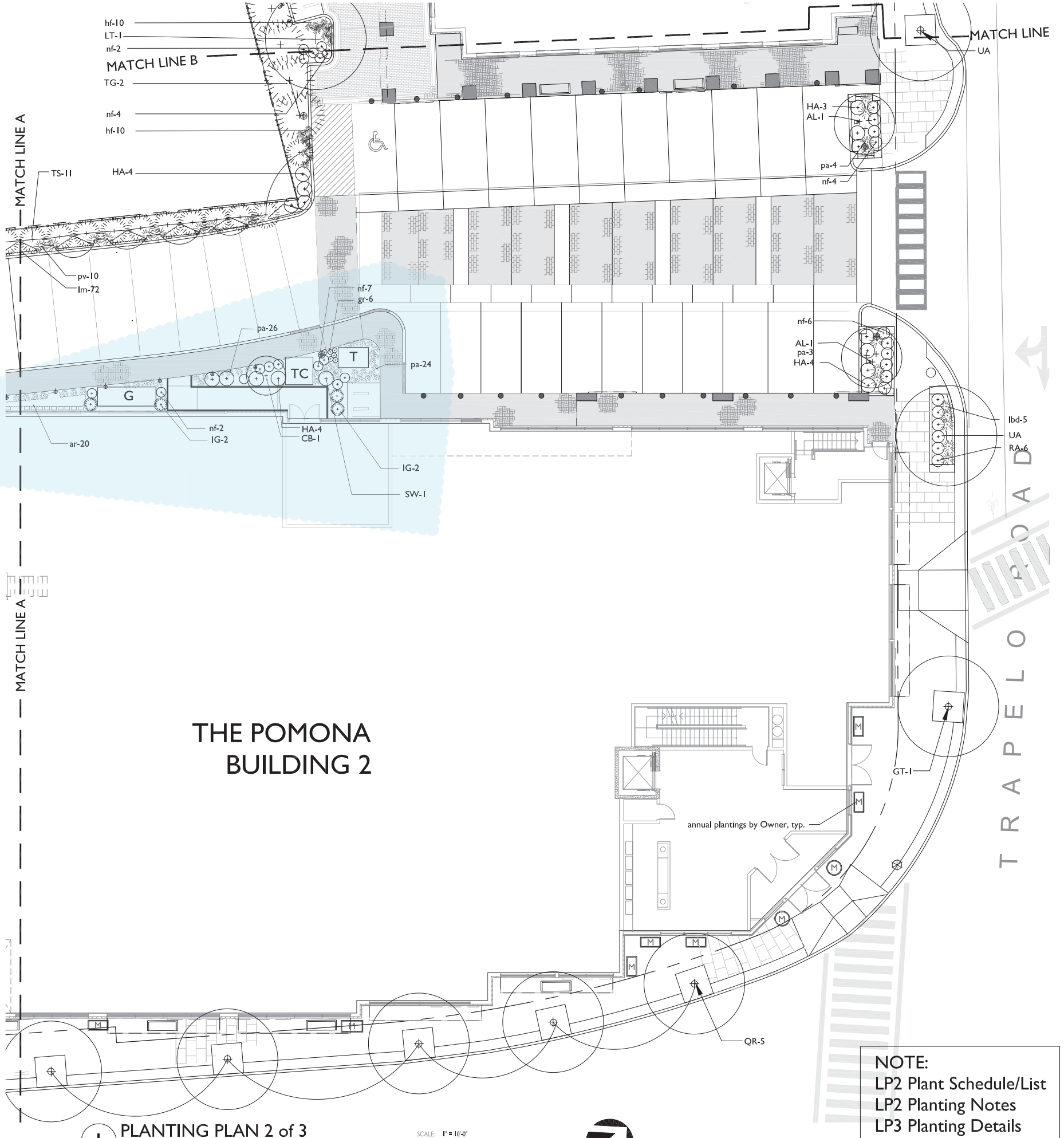

1 PLANTING PLAN 2 of 3
scale: 1"=10'-0"

NOTE:
LP2 Plant Schedule/List
LP2 Planting Notes
LP3 Planting Details

PLANTING NOTES

1. All plant material shall be approved by the Landscape Architect prior to arrival on the site.
2. All plant material shall conform to the guidelines established by "The American Standard for Nursery Stock", published by the American Horticultural Society.
3. No substitution of plant species will be allowed without the written approval of the Landscape Architect. Any proposed substitutions of plant species shall be a plant of equivalent overall form, height and branching habit, flower, leaf and fruit, color and time of bloom.
4. The Contractor shall locate and verify all utility line locations prior to excavation for tree pits and report any conflicts to the Landscape Architect.
5. All plants shall be placed in their approximate location by the Contractor. The Contractor shall adjust the locations as required by the Landscape Architect. Trees shall be placed first, then shrubs, then perennials and last, groundcovers. Final locations must be approved by the Landscape Architect prior to planting.
6. The rootballs of trees shall be planted 3" above adjacent finished grade. The rootballs of shrubs shall be planted 2" above adjacent finished grade. The rootflare of perennials shall be set at the level at which the plant was growing.
7. All planting to be done under the full time supervision of a certified arborist, nurseryman or licensed Landscape Architect.
8. All plants are to be thoroughly watered after installation, at least twice within the first 24 hours.
9. The Landscape Subcontractor shall coordinate with the General Contractor and Site Subcontractor all the requirements for subsoil testing and preparation and testing and placing of approved topsoil and planting soil mixes as described in the specifications. Failure of the site or General Contractor to perform required testing, subsoil and topsoil preparation does not relieve the Landscape Contractor from the requirements of the work as set forth in the specifications.

PLANT LIST

Key	Qty.	Botanical Name	Common Name	Min. Size	Notes:
Trees - Deciduous					
BN	5	Betula nigra 'Heritage'	River Birch	4.5 - 5" cal.	single stem
CB	1	Carpinus betulus 'Fastigiata'	Hornbeam	4.5 - 5" cal.	
GT	13	Gleditsia triacanthos 'Inermis' 'Skyline'	Thornless Honeylocust	4.5 - 5" cal.	
LT	1	Liriodendron tulipifera	Tulip Tree	4.5 - 5" cal.	
QR	10	Quercus rubrum	Red Oak	4.5 - 5" cal..	
UA	5	Ulmus americana 'Valley Forge'	Am. Elm	4.5 - 5" cal.	B&B
Trees - Evergreen					
AC	2	Abies concolor	White Fir	7 - 8' ht.	
CN	1	Chamaecyparis nootkatensis 'Pendula'	Alaska Cedar	7 - 8' ht.	
PA	4	Picea abies	Norway Spruce	7 - 8' ht.	
PP	4	Picea pungens	Blue Spruce	6 - 7' ht.	
PS	5	Pinus strobus	White Pine	8 -10' ht.	
TG	23	Thuja plicata 'Green Giant'	Arborvitae	8 -10' ht.	
TS	27	Thuja occidentalis 'Smaragd'	Arborvitae	7 - 8' ht.	
Ornamental Trees					
AL	8	Amelanchier leavis	Serviceberry	2.5-3" cal.	single stem
Shrubs					
CG	1	Chamaecyparis obtusa 'Nana Gracilis'	Dwarf Hinoki Cypress	24" ht.	
FG	18	Fothergilla gardenii	Dwarf Fothergilla	24"-30"	
HA	41	Hydrangea arborescens 'Annabelle'	Annabelle Hydrangea	2 Gal	
HQ	14	Hydrangea quercifolia	Oakleaf Hydrangea	3 - 3.5'	
IG	19	Ilex glabra 'Compacta'	Dwarf Inkberry Holly	24"-30"	
IR	18	Ilex verticillata 'Red Sprite'	Winterberry	30-36" - 1 male	
PF	13	Potentilla fruiticosa - 'Gold Drop'	Potentilla	#5 24-30"	
RA	22	Rhus aromatica 'Lo Gro'	Lo Gro Sumac	2 gal. pot	
RP	3	Rhododendron catawbiense 'Boursault'	Violet Rhododendron	30-36"	
SJ	20	Spiraea japonica 'Little Princess'	Little Princess Spirea	15"-18"	
SP	7	Syringa p. 'Miss Kim'	Miss Kim Lilac	24"-30"	
SV	12	Syringa vulgaris	Common Lilac	4-5' ht.	mixed colors
SW	1	Spiraea bumalda 'Anthony Waterer'	Anthony Waterer Spirea	18"-24"	2 Gal
VD	8	Viburnum dentatum 'Blue Muffin'	Arrowwood Viburnum	4' ht.	
TB	6	Taxus baccata 'Rapendens'	Spreading English Yew	30-36"	
Perennials, Groundcovers, Ferns					
ar	122	Ajuga reptans 'Bronze Beauty'	Ajuga	4" pots	
jpf	54	Athyrium niponicum 'picatum'	Japanese Painted Fern	1 gal pots	15" o.c.
cf	12	Calamagrostis acutiflora 'Karl Foerster'	Feather Reed Grass	2 gal pots	
dp	23	Dennstaedtia punctilobula	Hay-scented Fern	1 gal pots	
ep	10	Echinacea purpurea 'Magnus'	Coneflower	2 gal. pots	
gm	12	Geranium macrorrhizum 'Bevan's Variety'	Geranium	1 gal pots	
gr	21	Geranium x 'Rozanne'	Blue Geranium	1 gal pots	
hf	40	Hemerocallis 'Hyperion'	Daylily	2 gal. pots	
hs	3	Hosta sieboldiana 'Elegans'	Large Blue Hosta	2 gal. pots	
lm	149	Liriope muscari 'Royal Purple'	Lily Turf	1 qt. pots	
lbd	27	Lymus x Blue Dune	European Dune Grass	2 gal. pots	24" o.c.
ms	8	Miscanthus sinensis 'Morning Light'	Miscanthus	2 gal. pots	
nf	44	Nepeta faassenii 'Walker's Low'	Catmint	1 gal pots	
pa	70	Pennisetum aloepecuroides 'Hameln'	Dwarf Fountain Grass	2 gal. pots	
pv	78	Panicum virgatum 'Shenandoah'	Shenandoah Switchgrass	2 gal. pots	
tc	37	Tiarella cordifolia 'Running Tapestry'	Foamflower	1 gal pots	
vm	90	Vinca minor	Vinca	1 qt. pots	

PETER QUINN ARCHITECTS
ARCHITECTURE
PLANNING
COMMUNITY DESIGN

PETER QUINN ARCHITECTS LLC
259 ELM ST, SUITE 301
SOMERVILLE MA 02144
PH 617-354-3989 FAX 617-868-0280

SEAL

CONSULTANT

VERDANT
LANDSCAPE ARCHITECTURE
858 Harvard Street, Suite 5B, Brookline, MA 02446
Verdant Landscape Architecture.com
617.735.1180

CONSULTANT

PROJECT

THE BRADFORD
BELMONT, MA

PREPARED FOR

Toll Brothers
BELMONT RESIDENTIALS, LLC
BELMONT RESIDENTIALS, LLC
NEEDHAM, MA

DRAWING TITLE

Planting Plan

SCALE AS NOTED

REVISION	DATE
Definitive Plan Set	AUG. 31, 2017
GARAGE SET	AUG. 15, 2017
DEFINITIVE PLAN	AUG. 15, 2017

DRAWN BY	REVIEWED BY
KP	BH

SHEET

LP2

2

Y:\Cushing Square\CAD\BRAD_PLANT.dwg

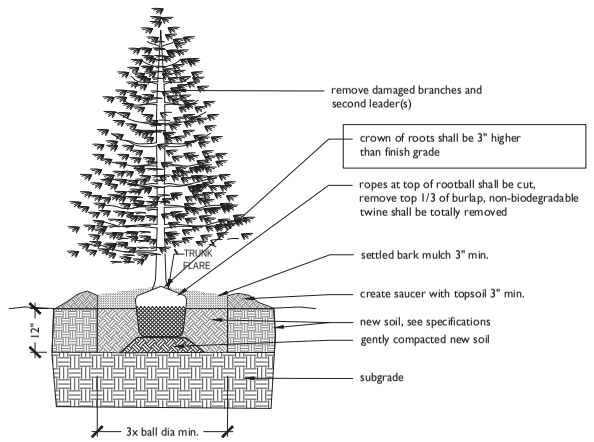

note: provide wooden stakes (3 per tree) in windy locations and as site conditions require, as directed by Landscape Architect

5 EVERGREEN TREE PLANTING
SCALE: 1/2" = 1'-0"

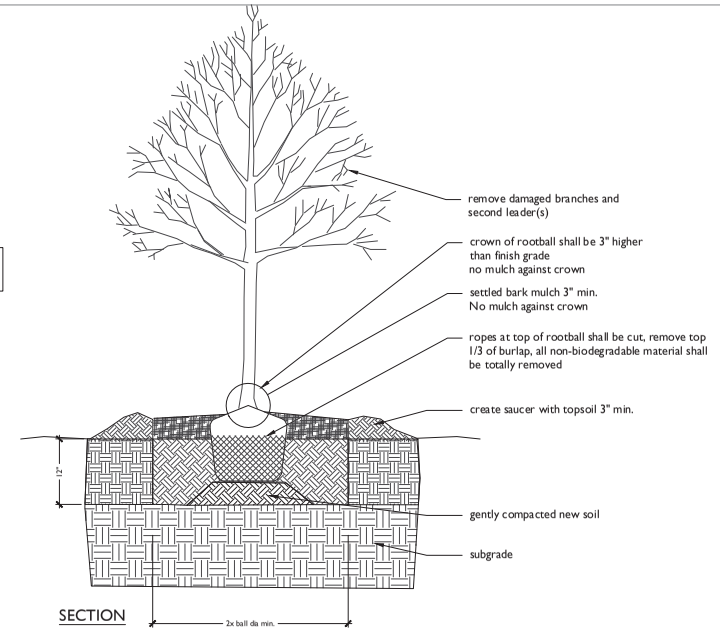

SECTION

5 DECIDUOUS TREE PLANTING
SCALE: 1/2" = 1'-0"

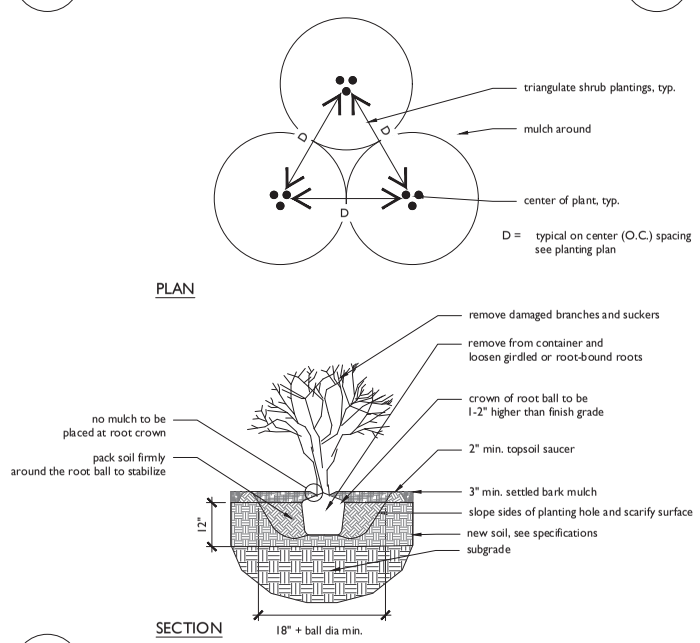

5 SHRUB PLANTING
SCALE: 1/2" = 1'-0"

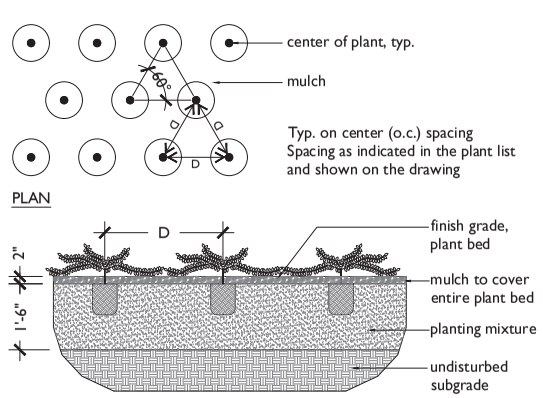

NOTE: Prior to planting, remove plant from container and comb out roots.

5 PERENNIAL, GROUNDCOVER
SCALE: 1/2" = 1'-0"

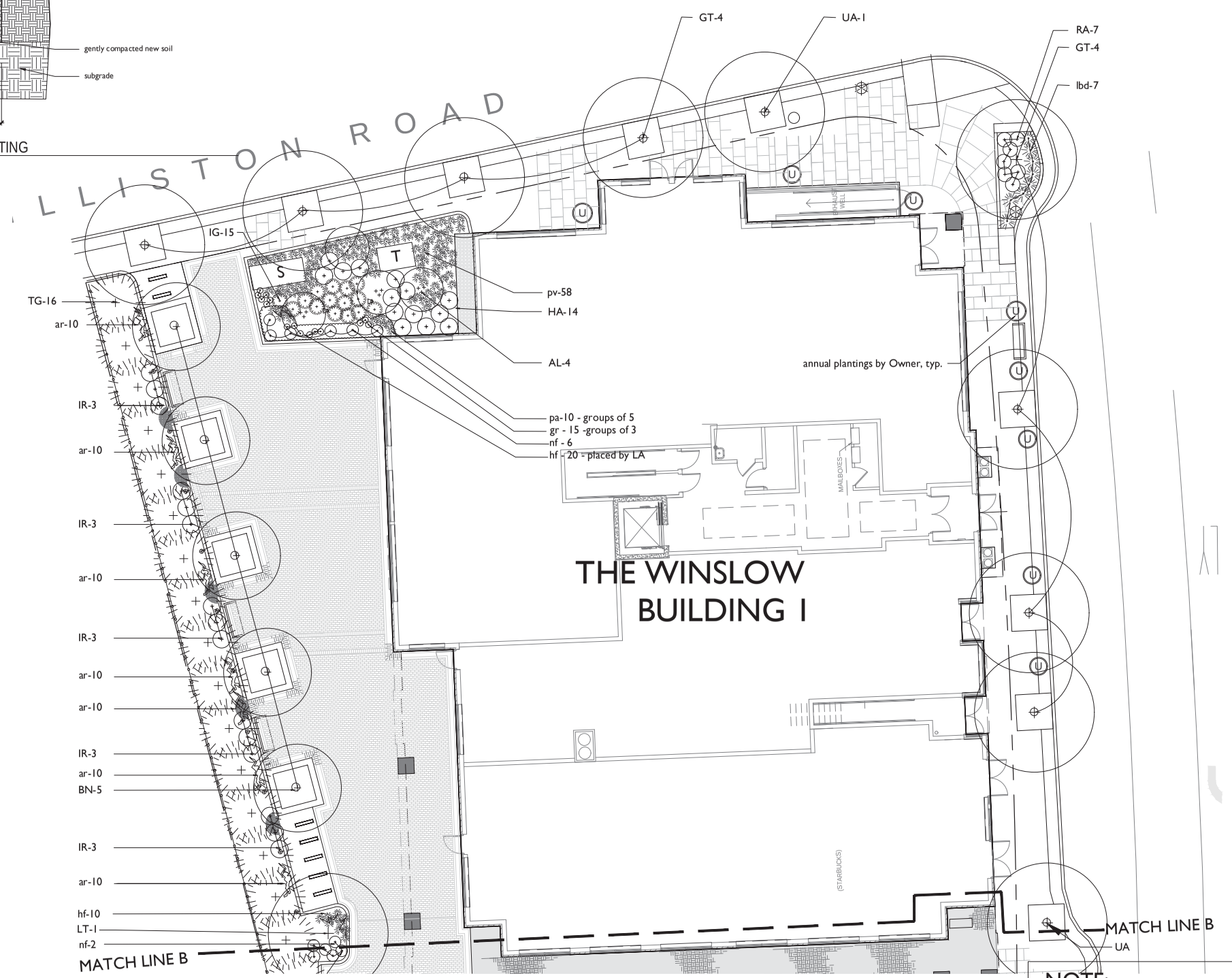

1 PLANTING PLAN 3 of 3
scale: 1"=10'-0"

SCALE: 1" = 10'-0"
0 5' 10' 25'

NOTE:
LP2 Plant schedule/List
LP2 Planting Notes
LP3 Planting Details

PETER QUINN ARCHITECTS
ARCHITECTURE
PLANNING
COMMUNITY DESIGN

PETER QUINN ARCHITECTS LLC
259 ELM ST, SUITE 301
SOMERVILLE MA 02144
PH 617-354-3989 FAX 617-868-0280

SEAL

CONSULTANT
VERDANT LANDSCAPE ARCHITECTURE
617.786.1380

CONSULTANT

PROJECT
THE BRADFORD
BELMONT, MA

PREPARED FOR
Toll Brothers
BELMONT RESIDENTIALS, LLC
BELMONT RESIDENTIAL, LLC
NEEDHAM, MA

DRAWING TITLE
Planting Plan

SCALE AS NOTED

REVISION	DATE
GARAGE SET	AUG. 15, 2017
DEFINITIVE PLAN	AUG. 15, 2017

DRAWN BY KP
REVIEWED BY BH

SHEET
LP3
2

y:\cushing square\CAD\BRAD_PLANT.dwg

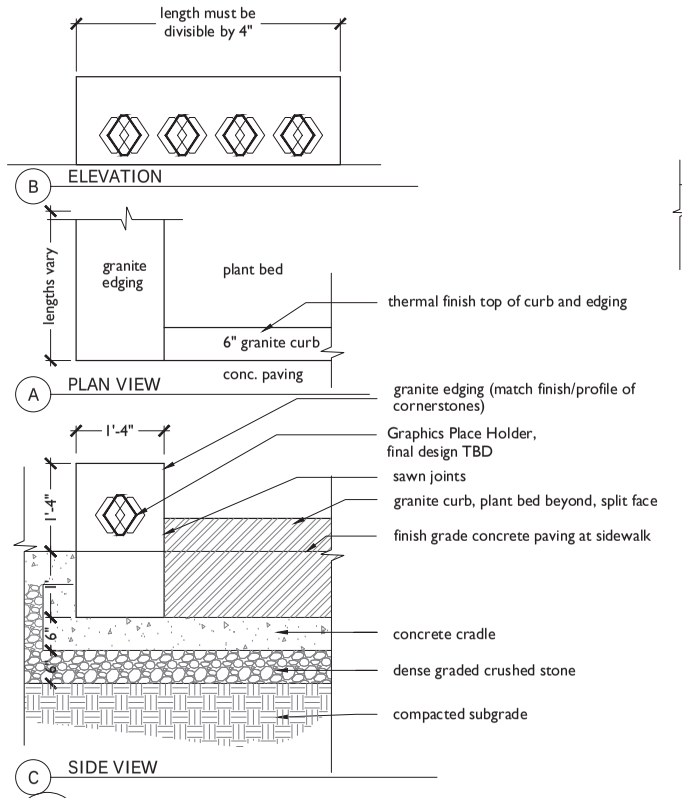

15 GRANITE EDGED PLANTER
SCALE: 3/4" = 1'-0"

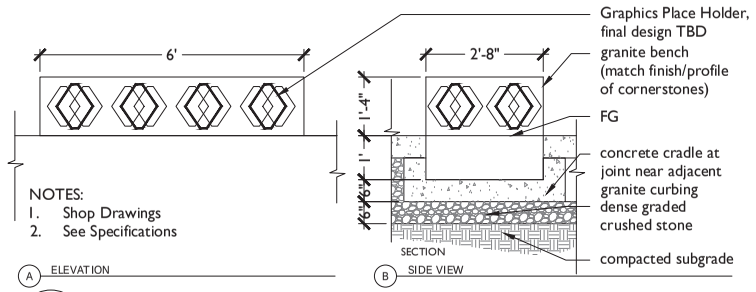

NOTES:
1. Shop Drawings
2. See Specifications

11 PARALLEL GRANITE BENCH
SCALE: NTS

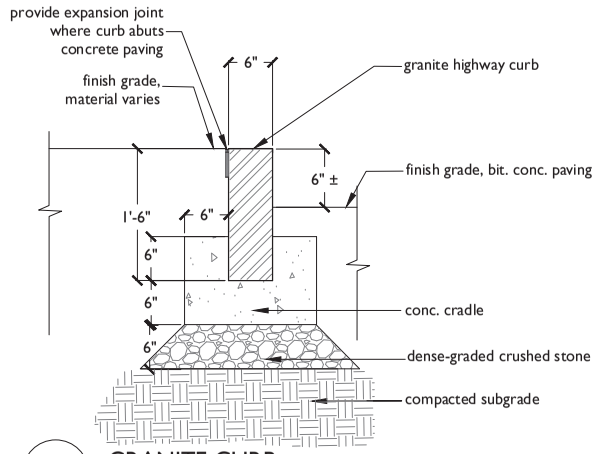

12 GRANITE CURB
SCALE: 1" = 1'-0"

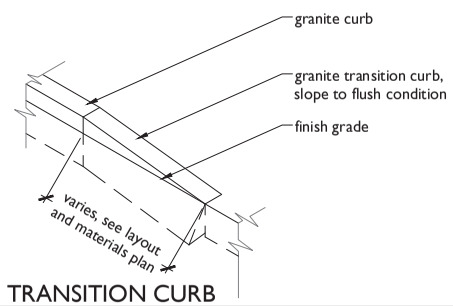

13 TRANSITION CURB
SCALE: NTS

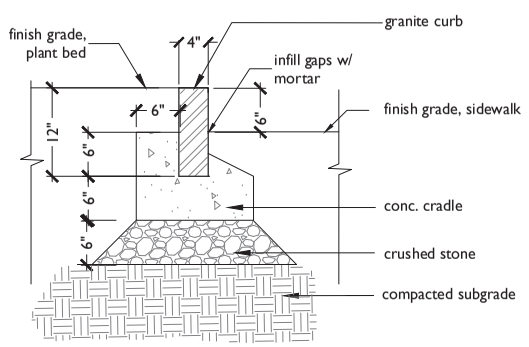

NOTES:
1. Curb shall have steeled top surface, split sides, mortar joints shall match granite color closely

16 GRANITE LANDSCAPE CURB
SCALE: 1" = 1'-0"

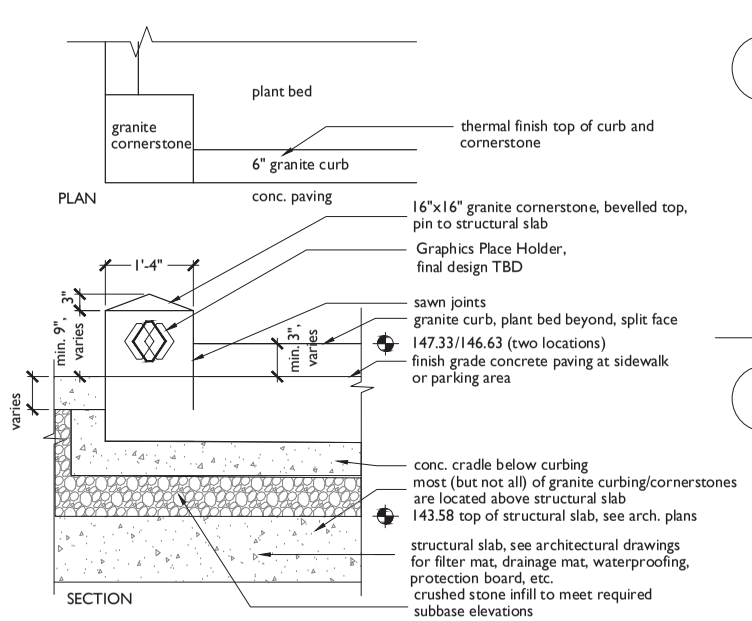

14 GRANITE CORNERSTONE
SCALE: 3/4" = 1'-0"

Style A: Brick red pigmented concrete, stamped with brick pattern. Use at pedestrian sidewalks, as noted on plan. Physical color and stamp samples to be provided for approval by Landscape Architect

6 CONCRETE PAVING | STAMPED STYLE A
SCALE: NTS

Style B: Medium grey pigmented concrete, stamped with granite cobble pattern. Use at vehicular drive. Physical color and stamp samples to be provided for approval by Landscape Architect.

7 CONCRETE PAVING | STAMPED STYLE B
SCALE: NTS

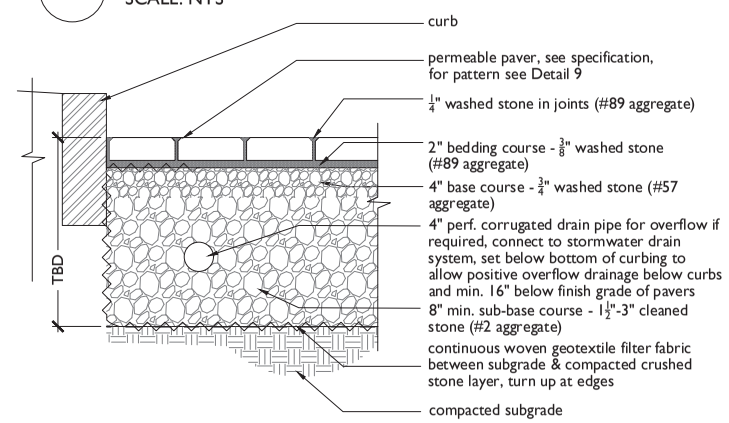

notes:
1) Bearing capacity and permeability of subsoil should be evaluated for suitability of application and stormwater management criteria.
2) Edge restraints required at flexible pavement or landscape.

8 PERVIOUS PAVERS
SCALE: 1" = 1'-0"

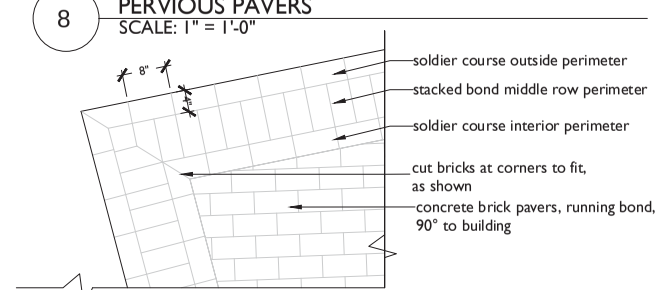

9 PERVIOUS PAVERS - PLAN
SCALE: 3/4" = 1'-0"

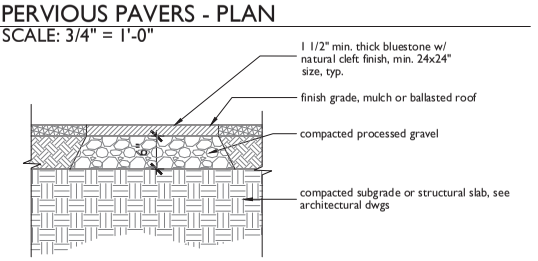

note: max. 2" joint between adjacent stepping stones

10 STEPPING STONES
SCALE: 1" = 1'-0"

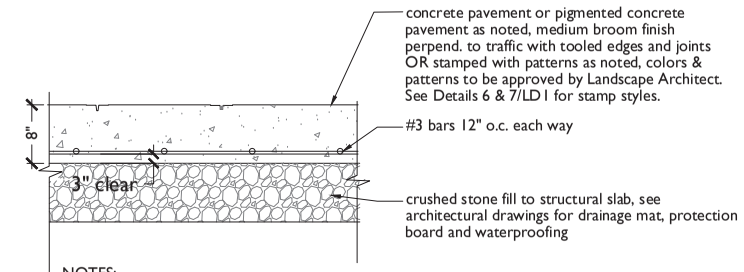

NOTES:
Expansion joints every 30' o.c. max. both ways. Score joints as shown on plan and every 5' o.c. max.

1 VEHICULAR CONCRETE PAVING ON STRUCTURE
SCALE: 1" = 1'-0"

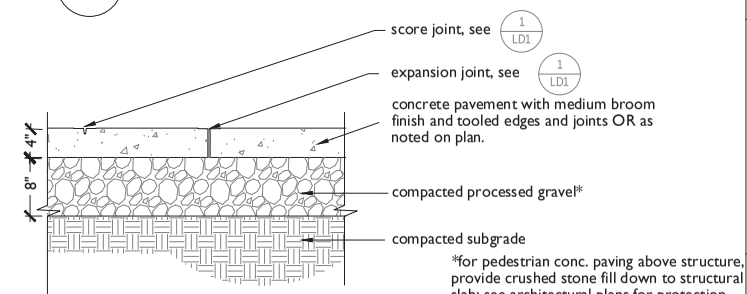

notes: Expansion joints every 30' o.c. max. both ways and score joints as shown on plan and every 5' o.c. max. both ways

2 CONCRETE PAVING
SCALE: 1" = 1'-0"

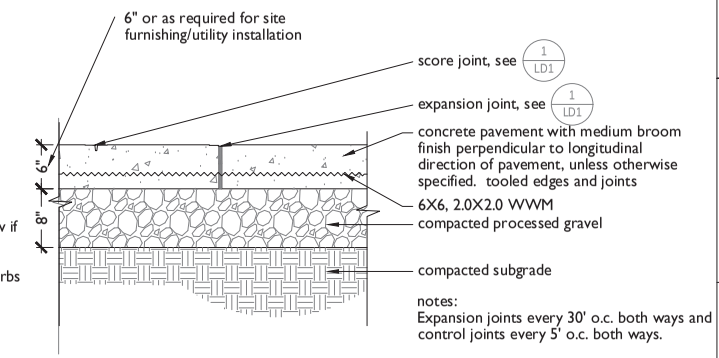

notes:
Expansion joints every 30' o.c. both ways and control joints every 5' o.c. both ways.

3 6" CONCRETE PAVING
SCALE: 1" = 1'-0"

notes:
1. expansion joints 30'-0" o.c. unless shown otherwise.
2. score joints 5'-0" o.c. unless shown otherwise.
3. tooled edges and joints all panels.
4. Dowel not required at 4" concrete paving.

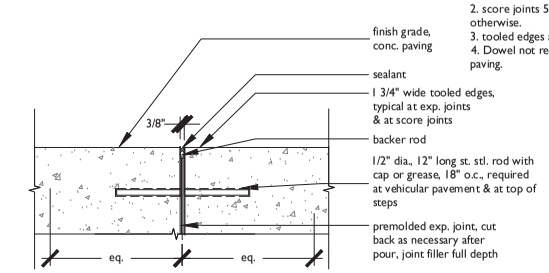

4 EXPANSION JOINT
SCALE: 1 1/2"=1'-0"

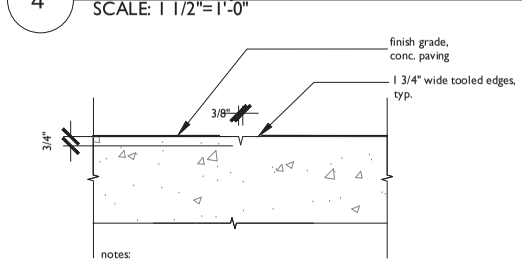

notes:
1. expansion joints 20'-0" o.c. unless shown otherwise.
2. score lines 5'-0" o.c. unless shown otherwise.
3. tooled edges and joints all panels

5 SCORE JOINT
SCALE: 1 1/2"=1'-0"

PETER QUINN ARCHITECTS
ARCHITECTURE
PLANNING
COMMUNITY DESIGN

PETER QUINN ARCHITECTS LLC
259 ELM ST, SUITE 301
SOMERVILLE MA 02144
PH 617-354-3989 FAX 617-868-0280

SEAL

CONSULTANT

VERDANT LANDSCAPE ARCHITECTURE
Verdant Landscape Architecture, Inc.
Verdant Landscape Architecture, Inc.
617.735.1382

CONSULTANT

PROJECT
THE BRADFORD
BELMONT, MA

PREPARED FOR
Toll Brothers
BELMONT RESIDENTIALS, LLC
BELMONT RESIDENTIAL, LLC
NEEDHAM, MA

DRAWING TITLE
LANDSCAPE SITE DETAILS PAVING + CURBS

SCALE AS NOTED

REVISION	DATE
GARAGE SET	AUG. 15, 2017
DEFINITIVE PLAN	AUG. 15, 2017

DRAWN BY	REVIEWED BY
KP	BH

SHEET
LD1
2

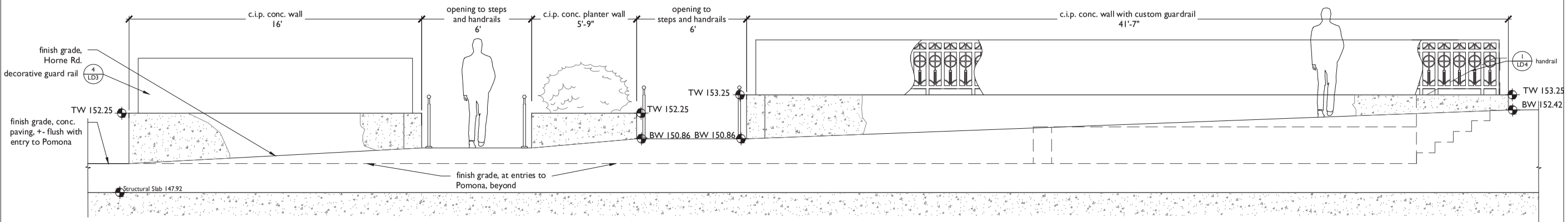

1 HORNE ROAD PLAZA FACING POMONA - SECTION ELEVATION
SCALE: 3/8" = 1'-0"

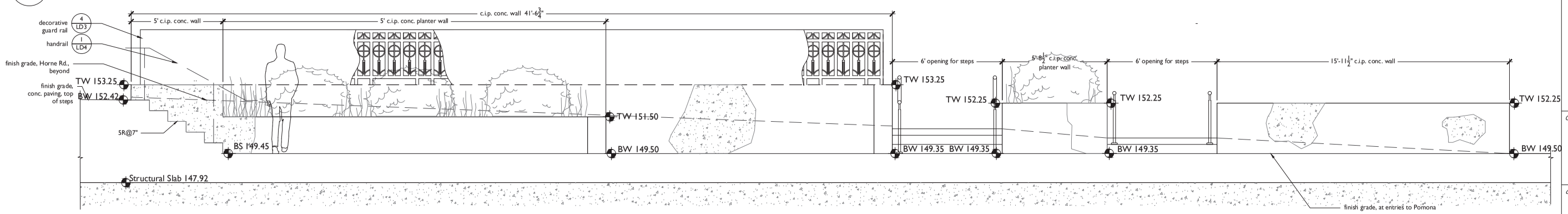

2 ENTRY AT POMONA FACING HORNE ROAD PLAZA - SECTION ELEVATION
SCALE: 3/8" = 1'-0"

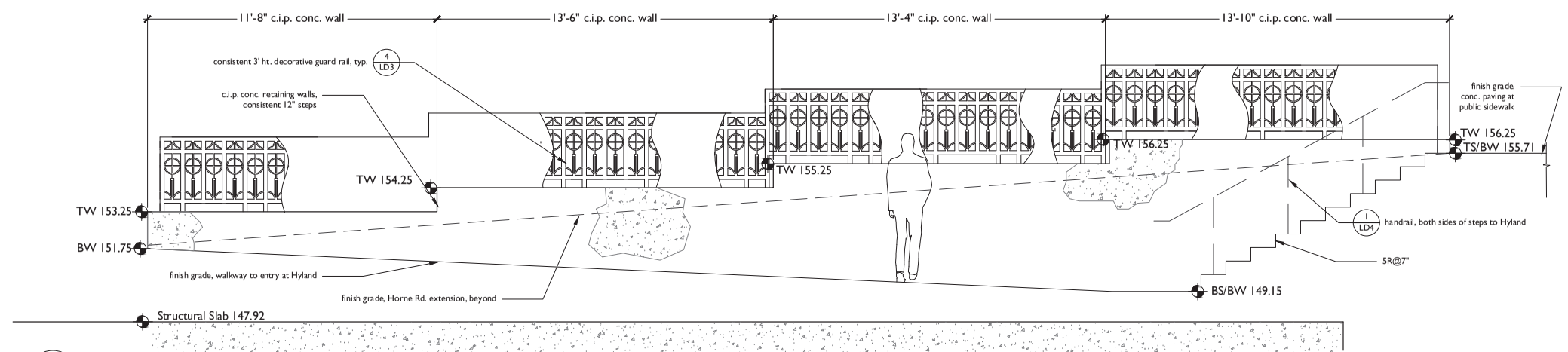

3 ENTRY AT HYLAND - FACING HORNE ROAD PLAZA - SECTION ELEVATION
SCALE: 3/8" = 1'-0"

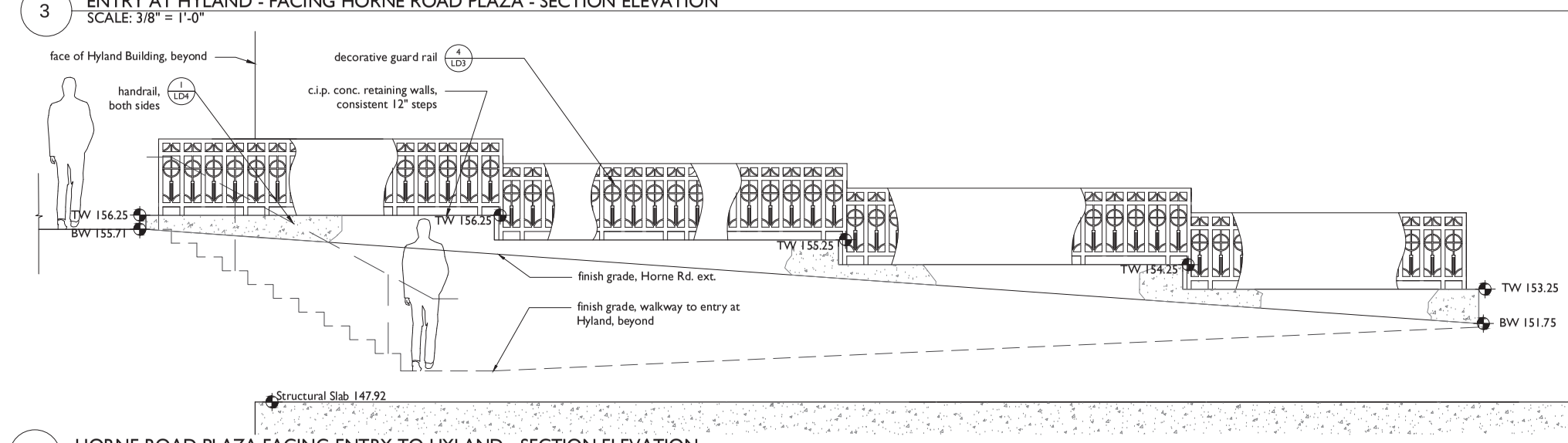

4 HORNE ROAD PLAZA FACING ENTRY TO HYLAND - SECTION ELEVATION
SCALE: 3/8" = 1'-0"

PETER QUINN ARCHITECTS
ARCHITECTURE
PLANNING
COMMUNITY DESIGN

PETER QUINN ARCHITECTS LLC
259 ELM ST, SUITE 301
SOMERVILLE MA 02144
PH 617-354-3989 FAX 617-868-0280

SEAL

CONSULTANT

VERDANT LANDSCAPE ARCHITECTURE
617.738.1180

CONSULTANT

PROJECT
THE BRADFORD
BELMONT, MA

PREPARED FOR
Toll Brothers
BELMONT RESIDENTIALS, LLC
BELMONT RESIDENTIAL, LLC
NEEDHAM, MA

DRAWING TITLE
LANDSCAPE SITE DETAILS SECTION ELEVATIONS

SCALE AS NOTED

REVISION	DATE
SP REVISION	18 June 2013
DEFINITIVE PLAN	AUG. 15, 2017

DRAWN BY	REVIEWED BY
KP	BH

SHEET
LD2

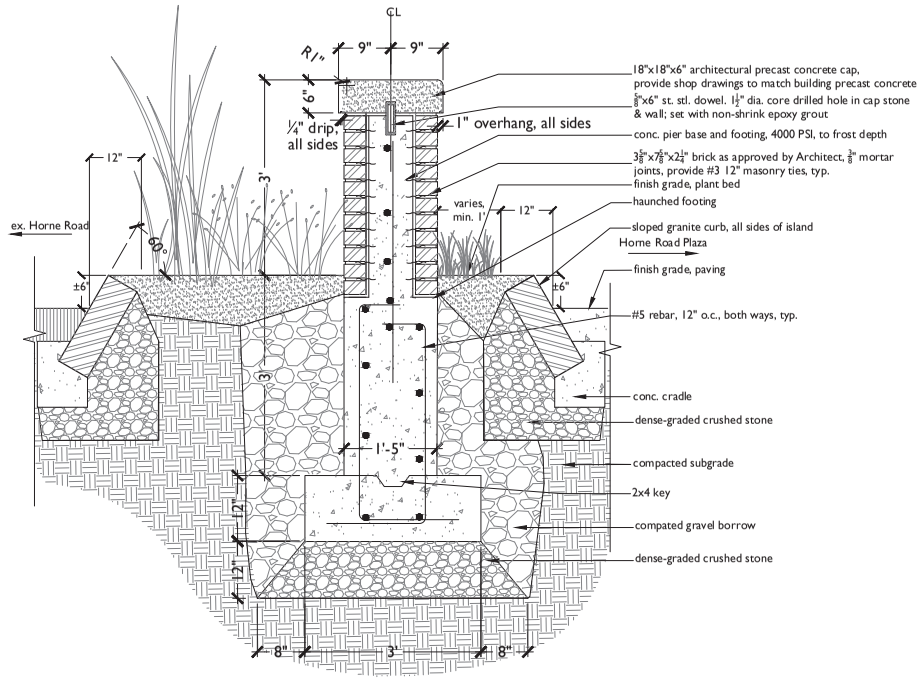

7 BRICK PIER AT PLANT BED + SLOPED CURB
SCALE: 3/4" = 1'-0"

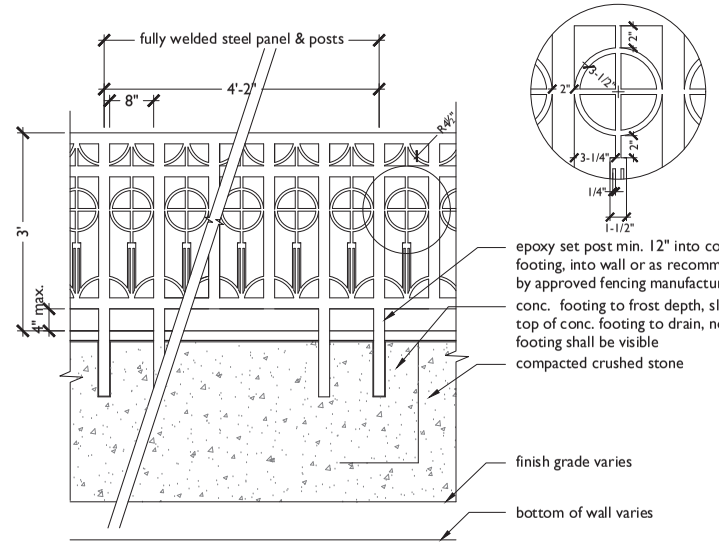

NOTES:
1. Gates to match fence style, height and manufacturer.
2. Provide complete shop drawings for fence manufacturer, fasteners, installation and finish.

4 DECORATIVE GUARD RAIL
SCALE: 3/4" = 1'-0"

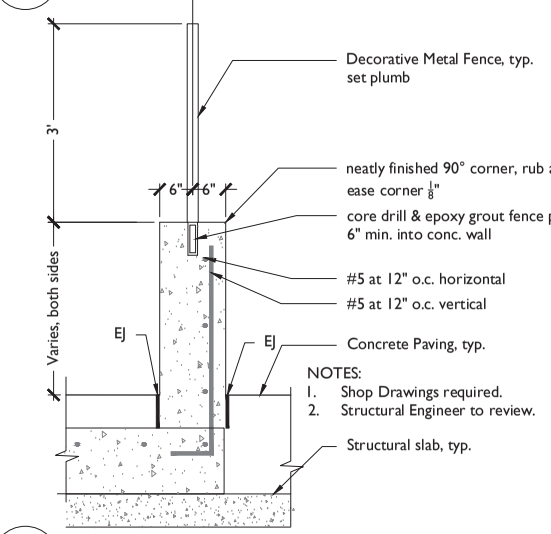

NOTES:
1. Shop Drawings required.
2. Structural Engineer to review.

5 DECORATIVE METAL FENCE + WALL
SCALE: 3/4" = 1'-0"

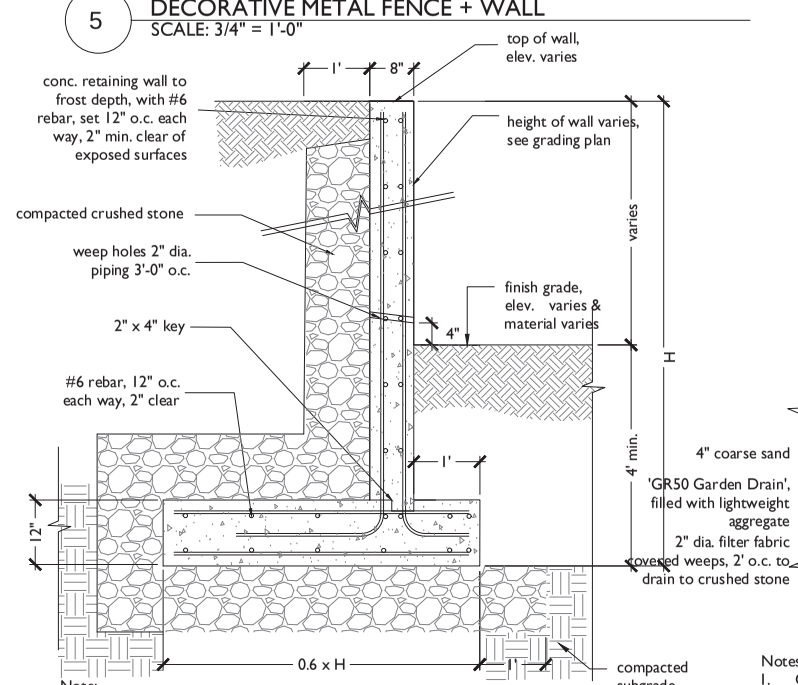

Note:
Contractor shall submit shop drawing for steel placement and size stamped by structural engineer

6 CONCRETE RETAINING WALL
SCALE: 3/4" = 1'-0"

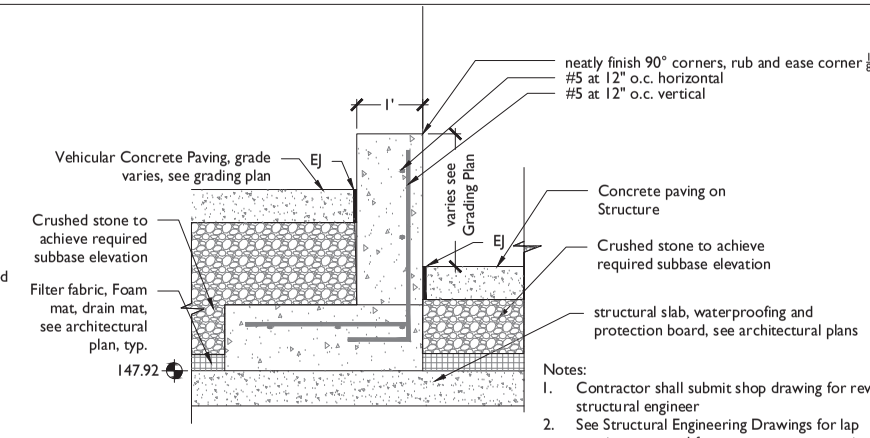

Notes:
1. Contractor shall submit shop drawing for review by structural engineer
2. See Structural Engineering Drawings for lap requirements and for concrete cover requirements.
3. All reinforcing bars shall conform to ASTM A615, grade 60 or as required by structural engineer

1 CONCRETE WALL ON STRUCTURE
SCALE: 3/4" = 1'-0"

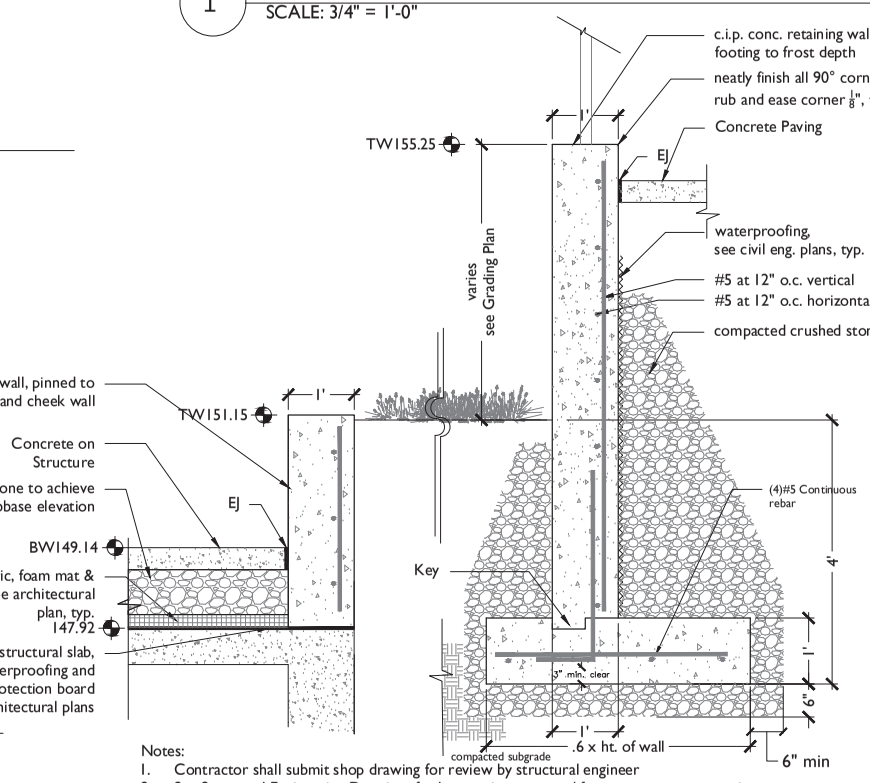

Notes:
1. Contractor shall submit shop drawing for review by structural engineer
2. See Structural Engineering Drawings for lap requirements and for concrete cover requirements.
3. All reinforcing bars shall conform to ASTM A615, grade 60 or as required by structural engineer

2 TERRACED WALLS | ON STRUCTURE TO AT GRADE
SCALE: 3/4" = 1'-0"

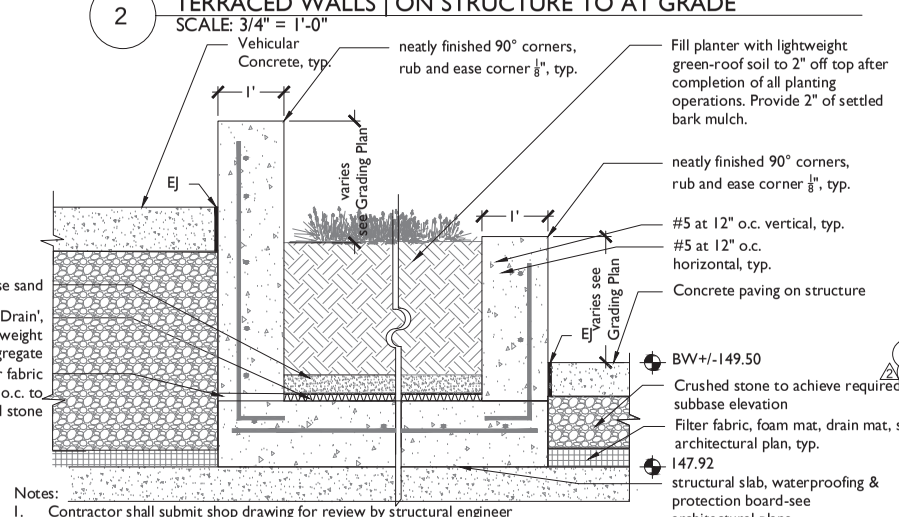

Notes:
1. Contractor shall submit shop drawing for review by structural engineer
2. See Structural Engineering Drawings for lap requirements and for concrete cover requirements.
3. All reinforcing bars shall conform to ASTM A615, grade 60 or as required by structural engineer

3 TERRACED WALLS | ON STRUCTURE
SCALE: 3/4" = 1'-0"

PETER QUINN ARCHITECTS
ARCHITECTURE
PLANNING
COMMUNITY DESIGN

PETER QUINN ARCHITECTS LLC
259 ELM ST, SUITE 301
SOMERVILLE MA 02144
PH 617-354-3989 FAX 617-868-0280

SEAL

CONSULTANT
VERDANT LANDSCAPE ARCHITECTURE
617.738.1180

CONSULTANT

PROJECT
THE BRADFORD
BELMONT, MA

PREPARED FOR
Toll Brothers
BELMONT RESIDENTIALS, LLC
BELMONT RESIDENTIAL, LLC
NEEDHAM, MA

DRAWING TITLE
LANDSCAPE SITE DETAILS WALLS

SCALE AS NOTED

REVISION	DATE
2 GARAGE SET	AUG. 15, 2017
DEFINITIVE PLAN	AUG. 15, 2017

DRAWN BY: KP
REVIEWED BY: BH

SHEET
LD3
2

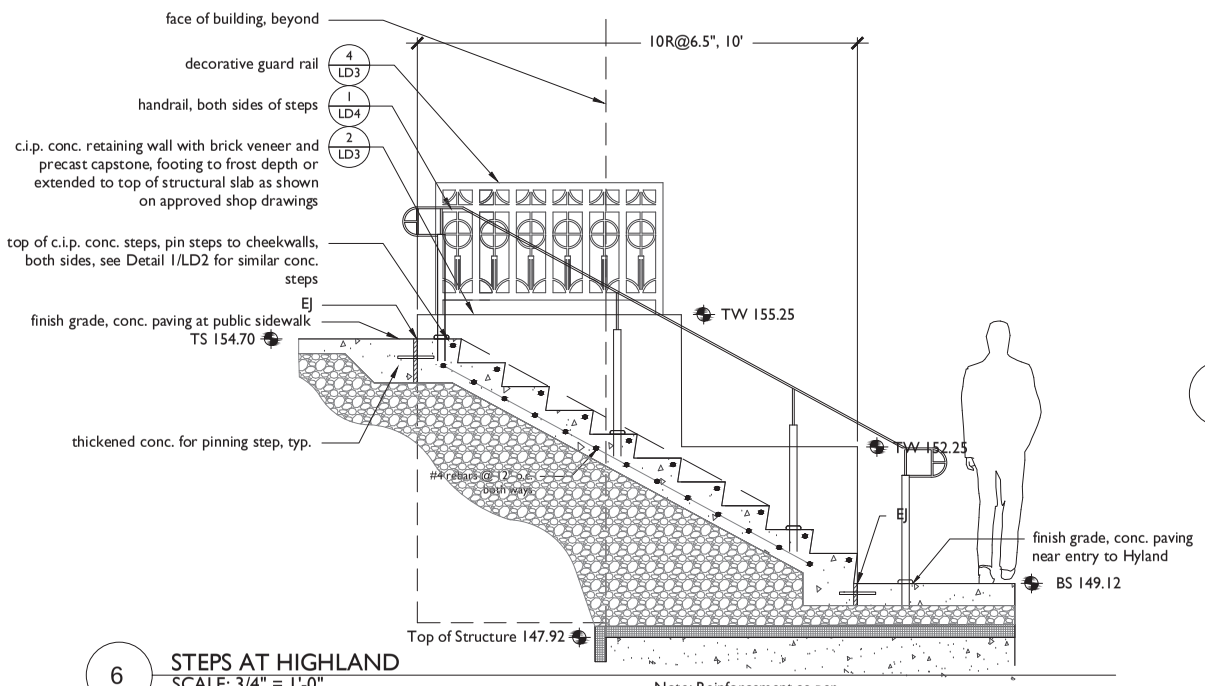

6 STEPS AT HIGHLAND
SCALE: 3/4" = 1'-0"

Note: Reinforcement as per approved shop drawings reviewed by structural engineer.

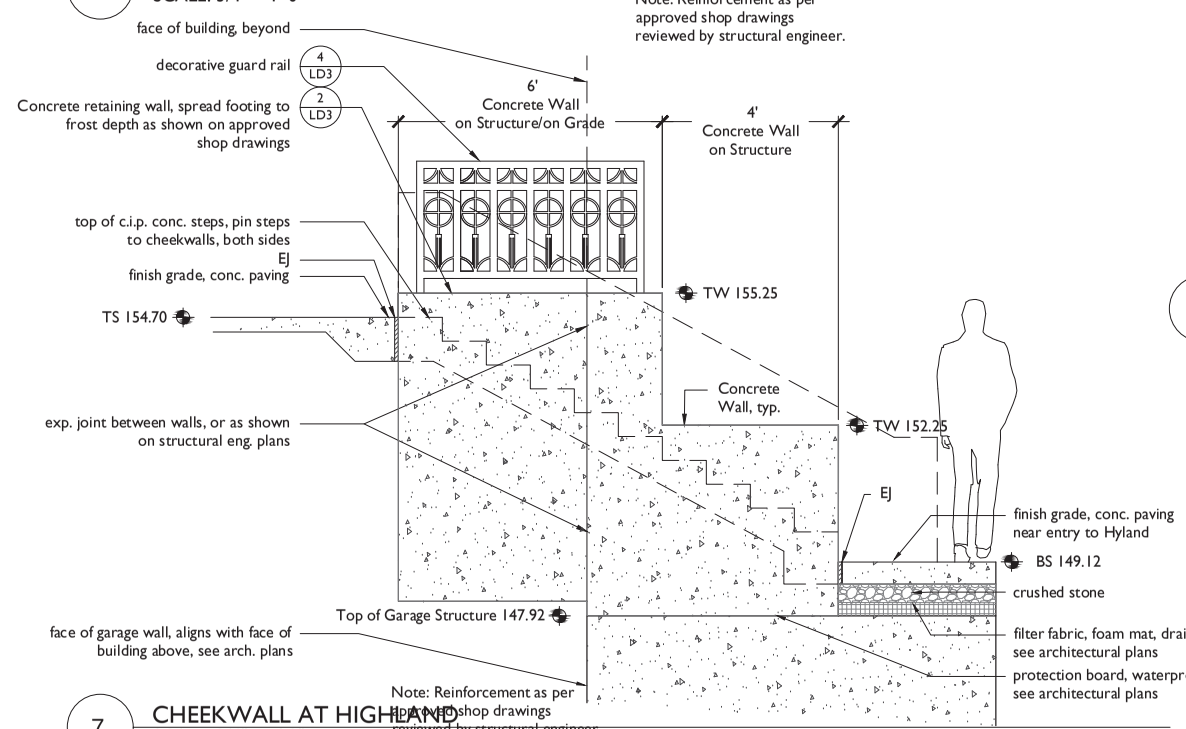

Note: Reinforcement as per approved shop drawings reviewed by structural engineer.

7 CHEEKWALL AT HIGHLAND
SCALE: 3/4" = 1'-0"

3 DETAIL - NOT USED
SCALE: 1" = 1'-0"

4 DETAIL - NOT USED
SCALE: 1" = 1'-0"

2 DETAIL - NOT USED
SCALE: 1" = 1'-0"

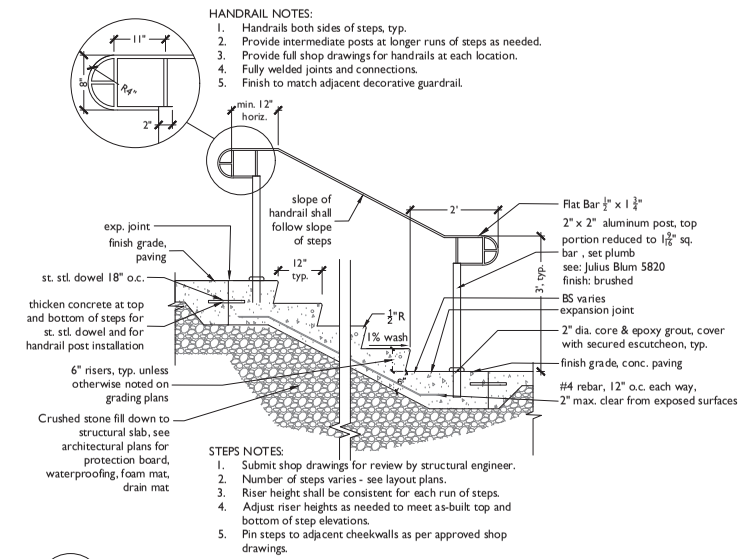

HANDRAIL NOTES:
1. Handrails both sides of steps, typ.
2. Provide intermediate posts at longer runs of steps as needed.
3. Provide full shop drawings for handrails at each location.
4. Fully welded joints and connections.
5. Finish to match adjacent decorative guardrail.

STEPS NOTES:
1. Submit shop drawings for review by structural engineer.
2. Number of steps varies - see layout plans.
3. Riser height shall be consistent for each run of steps.
4. Adjust riser heights as needed to meet as-built top and bottom of step elevations.
5. Pin steps to adjacent cheekwalls as per approved shop drawings.

1 CONCRETE STEPS - HANDRAIL BOTH SIDES
SCALE: 3/4" = 1'-0"

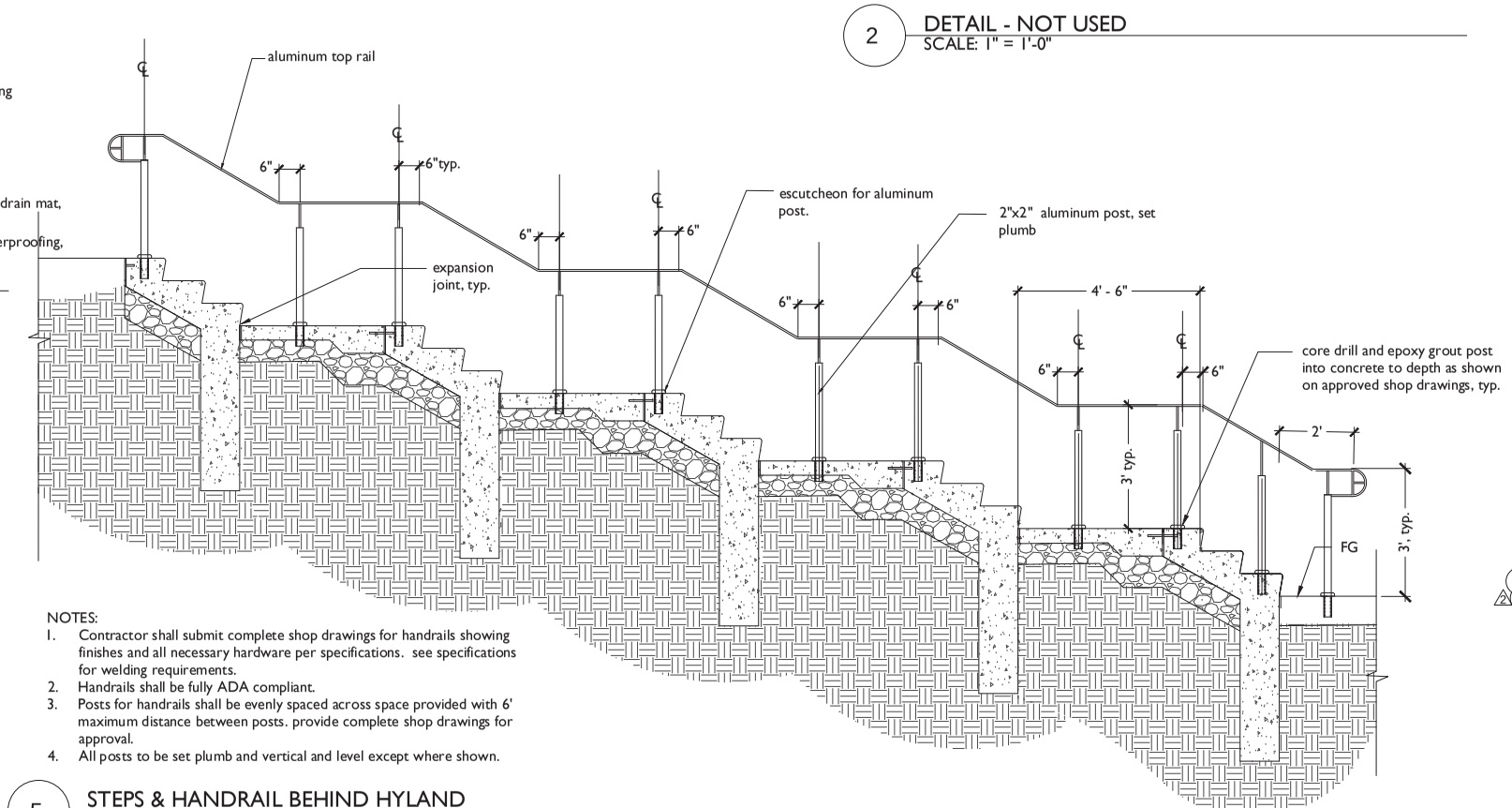

NOTES:
1. Contractor shall submit complete shop drawings for handrails showing finishes and all necessary hardware per specifications. see specifications for welding requirements.
2. Handrails shall be fully ADA compliant.
3. Posts for handrails shall be evenly spaced across space provided with 6' maximum distance between posts. provide complete shop drawings for approval.
4. All posts to be set plumb and vertical and level except where shown.

5 STEPS & HANDRAIL BEHIND HYLAND
SCALE: 3/4" = 1'-0"

PETER QUINN ARCHITECTS
ARCHITECTURE
PLANNING
COMMUNITY DESIGN
PETER QUINN ARCHITECTS LLC
259 ELM ST, SUITE 301
SOMERVILLE MA 02144
PH 617-354-3989 FAX 617-868-0280

SEAL

CONSULTANT
VERDANT LANDSCAPE ARCHITECTURE
617.738.1180

CONSULTANT

PROJECT
THE BRADFORD
BELMONT, MA

PREPARED FOR
Toll Brothers
BELMONT RESIDENTIALS, LLC
BELMONT RESIDENTIAL, LLC
NEEDHAM, MA

DRAWING TITLE
LANDSCAPE SITE DETAILS STEPS + RAILINGS

SCALE AS NOTED

REVISION	DATE
2 GARAGE SET	AUG. 15, 2017
DEFINITIVE PLAN	AUG. 15, 2017

DRAWN BY KP
REVIEWED BY BH

SHEET
LD4
2

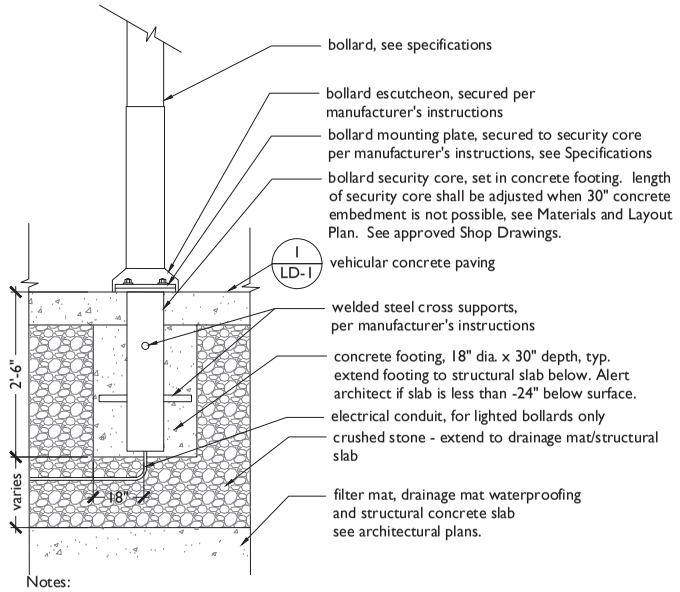

Notes:
1. See Materials and Layout plan for bollard location and type (lit or non-lit).
2. See Specifications for bollard manufacturer and model.
3. When less than 30" of concrete embedment of security core is required, installation shall follow shop drawings approved by structural engineer.
4. See MEP drawings for all wiring, conduit, controls, and appurtenances.

7 BOLLARD - FOOTING MOUNTED
SCALE: 3/4" = 1'-0"

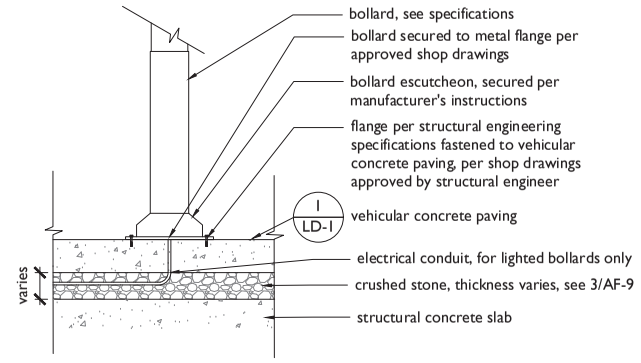

Notes:
1. See Materials and Layout plan for bollard location and type (lit or non-lit).
2. See Specifications for bollard manufacturer and model.
3. See approved shop drawings for flange specifications and method of fastening to vehicle grade concrete.
4. See MEP drawings for all wiring, conduit, controls, and appurtenances.

4 BOLLARD- SURFACE MOUNT
SCALE: 3/4" = 1'-0"

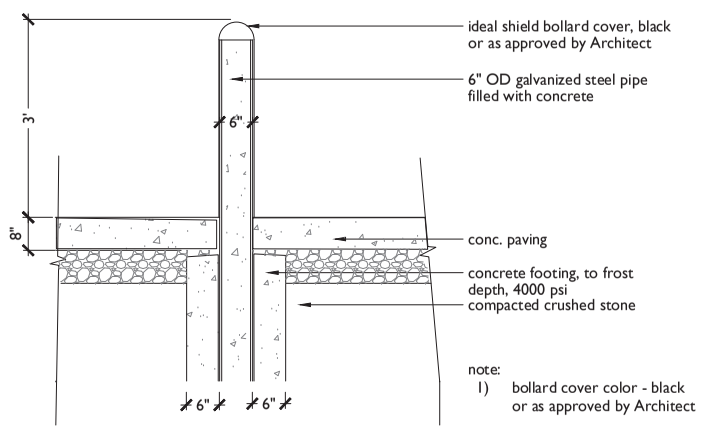

note:
1) bollard cover color - black or as approved by Architect

8 SECURITY BOLLARD ON GRADE - SECTION
SCALE: 3/4" = 1'-0"

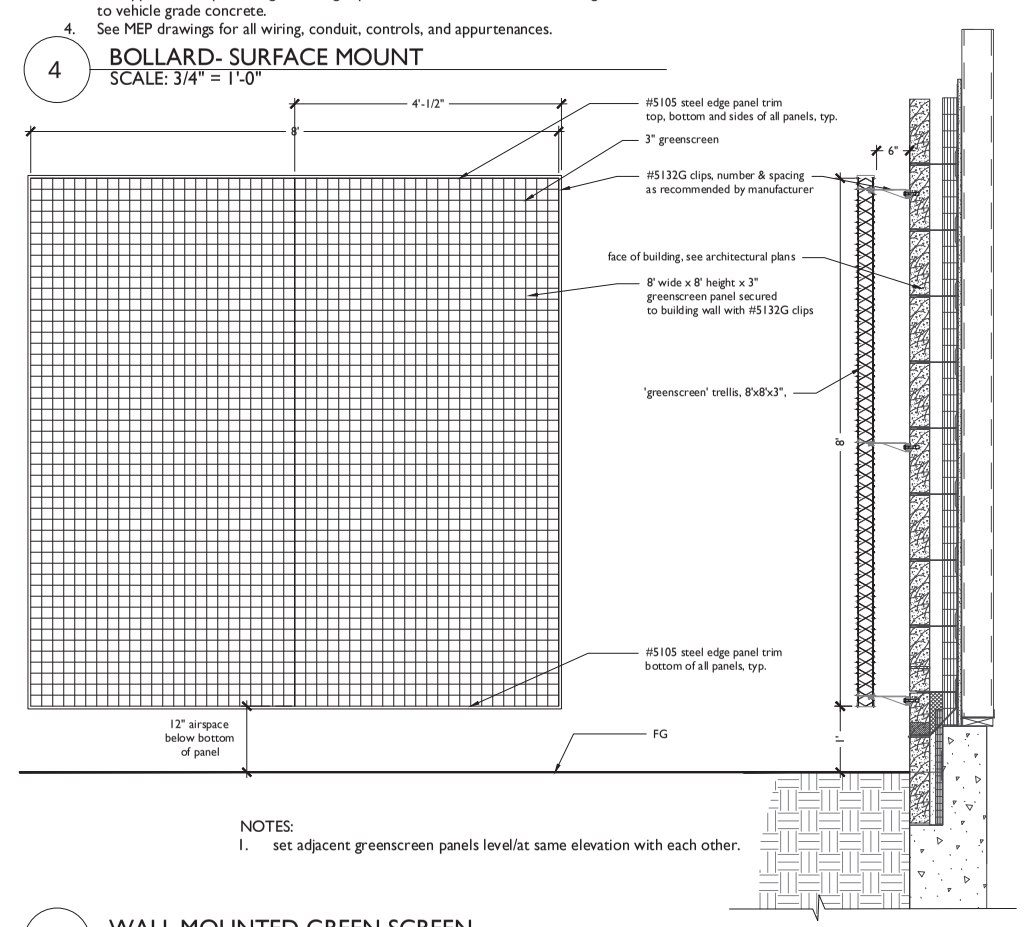

NOTES:
1. set adjacent greenscreen panels level/at same elevation with each other.

5 WALL MOUNTED GREEN SCREEN
SCALE: 3/4" = 1'-0"

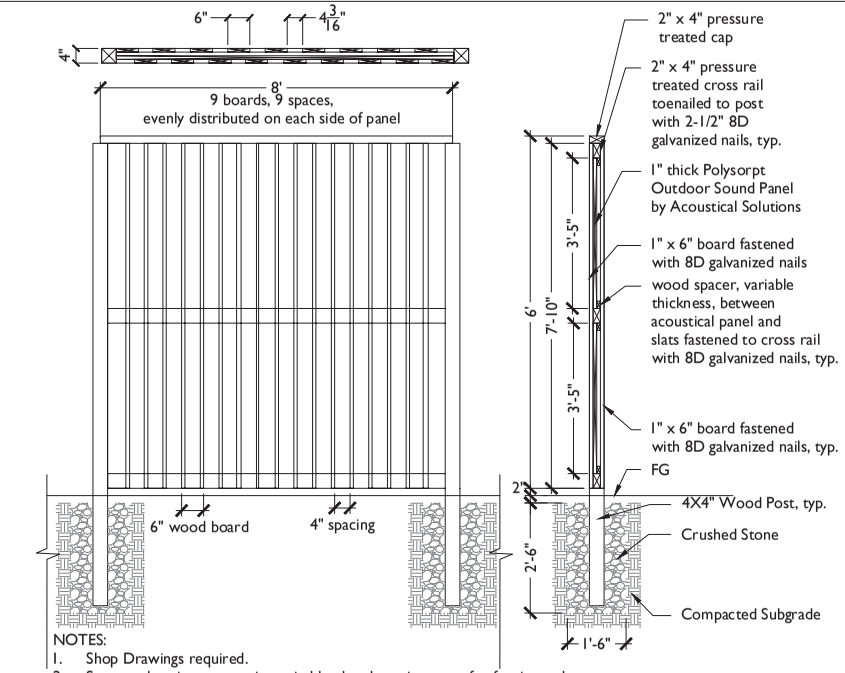

NOTES:
1. Shop Drawings required.
2. Structural engineer to review wind load and requirements for footing and cross-bracing or other reinforcements.
3. All wood shall be northern white cedar and free of knots, checks, and rot.
4. Step fence panels to follow sloped grade. Cut bottom of panel to follow grade. Max. 4" airspace.
5. Omit bollard escutcheon and cabinet on property line side of fence.

1 8' HT WOOD SHADOW BOX FENCE
SCALE: 1/2" = 1'-0"

notes:
1) bollard cover color - black
2) where sited above structure, provide footing and post to top of structure. Cut post and footing short of structural slab. No penetrations through waterproofing/slab.

9 SECURITY BOLLARD ON STRUCTURE - SECTION
SCALE: 3/4" = 1'-0"

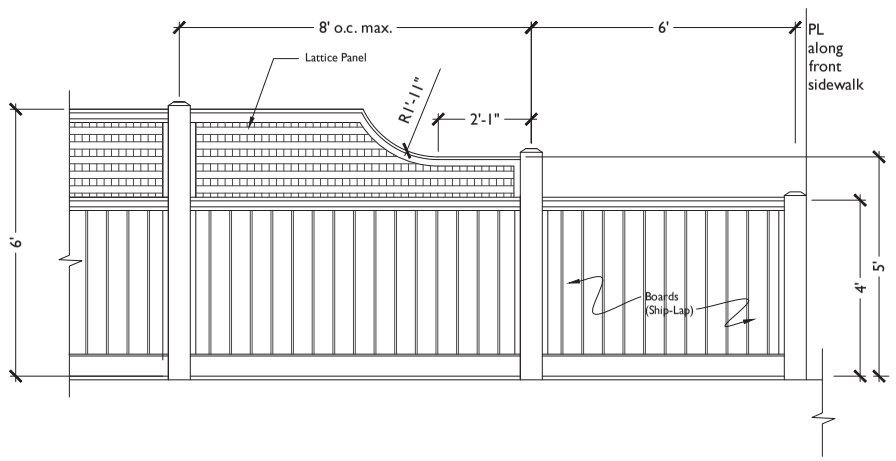

6 TRANSITION FENCE PANEL
SCALE: 1/2" = 1'-0"

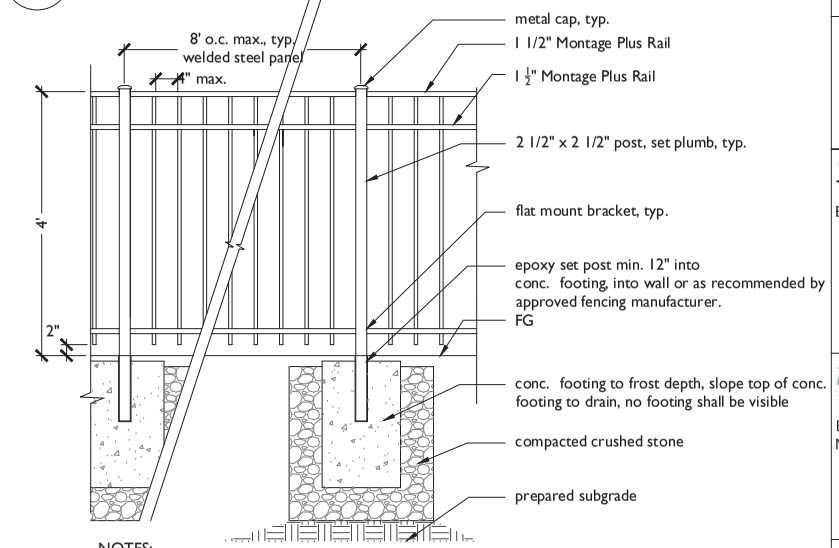

NOTES:
1. Gates to match fence style, height and manufacturer.
2. Fencing shall be 'Montage Plus Majestic 3 Rail' from Ameristar, 1555 N. Mingo, Tulsa, OK 74116. 1-888-333-3422; www.ameristarfence.com OR approved equal.
3. Provide complete shop drawings for fence manufacturer, fasteners, installation and finish.

2 METAL FENCE
SCALE: 3/4" = 1'-0"

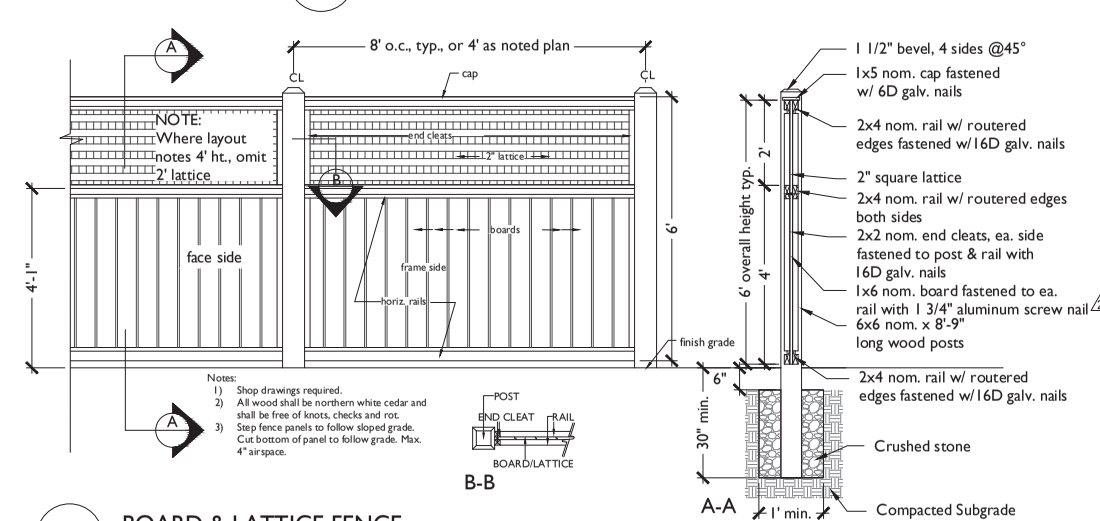

Notes:
1) Shop drawings required.
2) All wood shall be northern white cedar and shall be free of knots, checks and rot.
3) Step fence panels to follow sloped grade. Cut bottom of panel to follow grade. Max. 4" airspace.

3 BOARD & LATTICE FENCE
SCALE: 1/2" = 1'-0"

PETER QUINN ARCHITECTS
ARCHITECTURE
PLANNING
COMMUNITY DESIGN

PETER QUINN ARCHITECTS LLC
259 ELM ST, SUITE 301
SOMERVILLE MA 02144
PH 617-354-3989 FAX 617-868-0280

SEAL

CONSULTANT

VERDANT LANDSCAPE ARCHITECTURE
617.738.1180

CONSULTANT

PROJECT
THE BRADFORD
BELMONT, MA

PREPARED FOR
Toll Brothers
BELMONT RESIDENTIAL, LLC
BELMONT RESIDENTIAL, LLC
NEEDHAM, MA

DRAWING TITLE
LANDSCAPE SITE DETAILS FENCES + BOLLARDS

SCALE AS NOTED

REVISION	DATE
GARAGE SET	AUG. 15, 2017
DEFINITIVE PLAN	AUG. 15, 2017

DRAWN BY	REVIEWED BY
KP	BH

SHEET
LD5
2

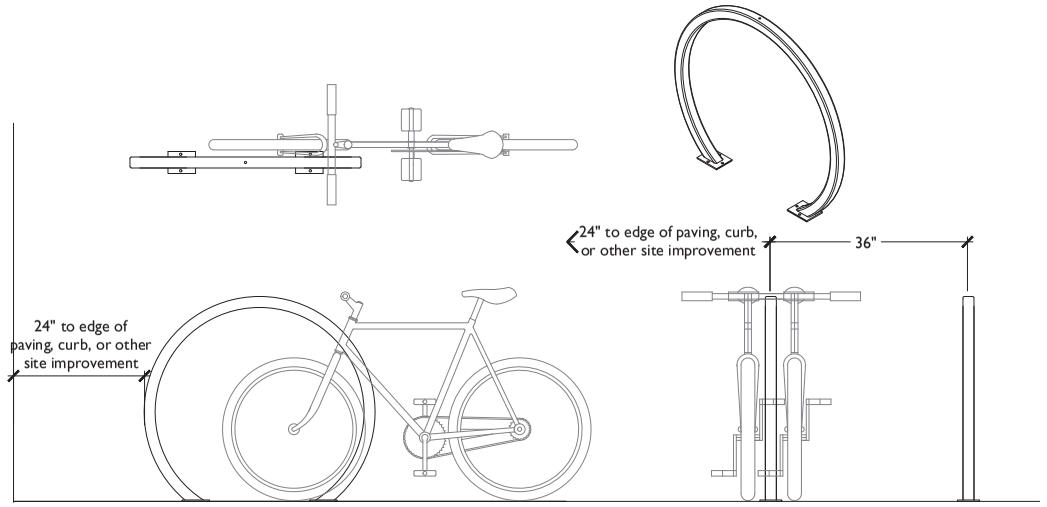

Notes:
1. Bike rack is "Arc" by Dero.
2. Bike rack shall be surface mounted to concrete pavement in methods prescribed by manufacturer.
3. See Specifications for color and finish.

10 BIKE RACK
SCALE: 3/4" = 1'-0"

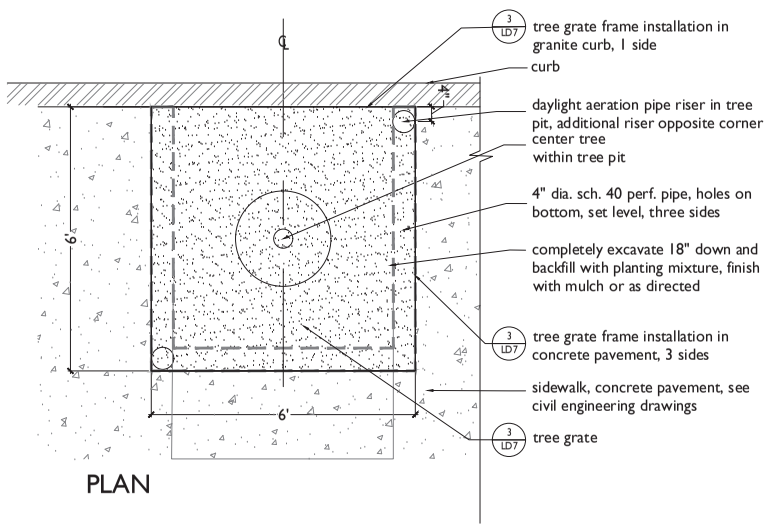

7 DETAIL - NOT USED
SCALE:NTS

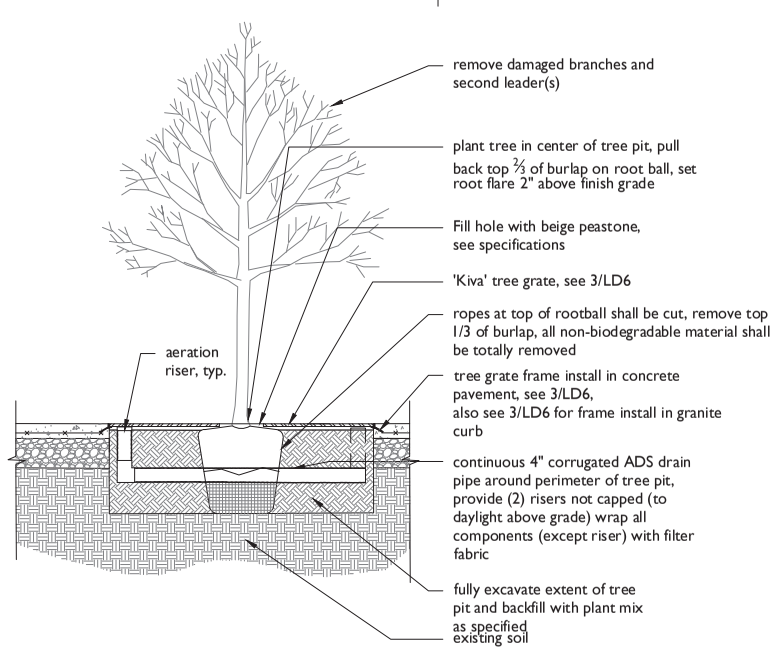

11 STREET TREE PIT SECTION + PLAN
SCALE: 3/4" = 1'-0"

8 DETAIL - NOT USED
SCALE:NTS

9 DETAIL - NOT USED
SCALE:NTS

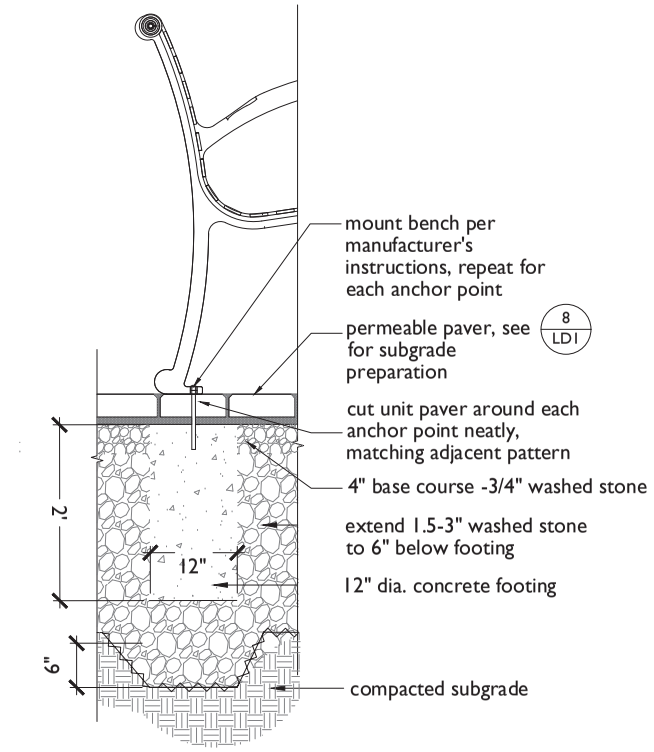

4 BENCH ON PERVIOUS PAVERS
SCALE: 3/4" = 1'-0"

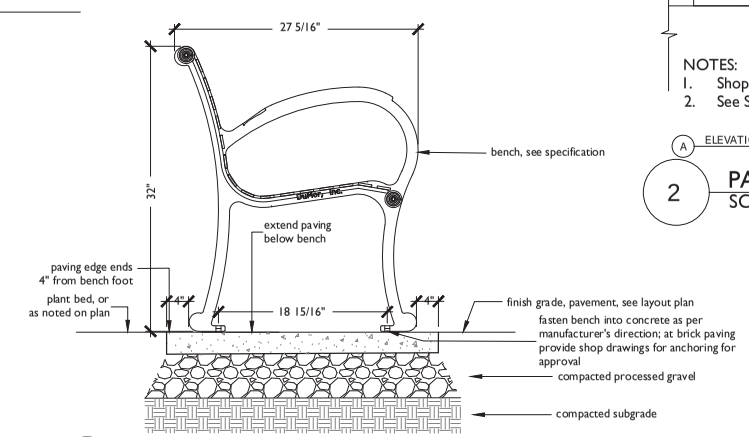

5 BENCH ON CONCRETE
SCALE: NTS

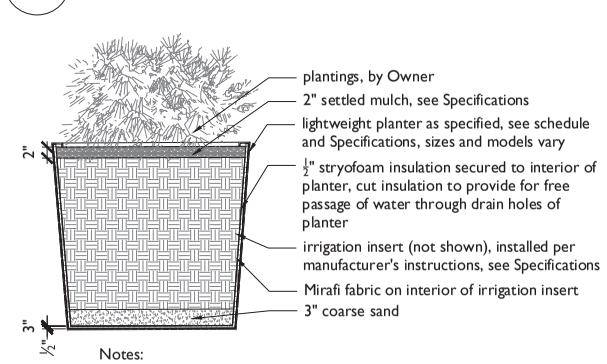

Notes:
1. See Specifications and Schedule for quantities and model numbers of planters and irrigation inserts.
2. Install irrigation insert according to manufacturer's instructions.
3. Planters shall be placed in locations noted on the Materials and Layout Plans.

6 PLANTERS AT STREETSCAPE
SCALE: NTS

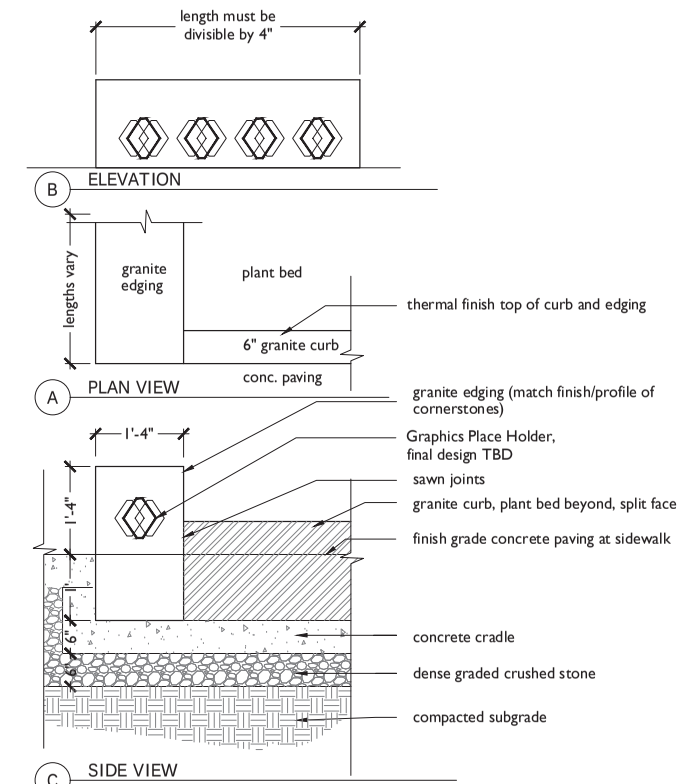

1 GRANITE EDGED PLANTER
SCALE: 3/4" = 1'-0"

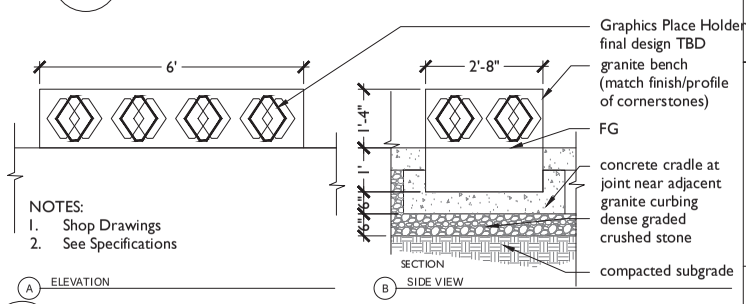

NOTES:
1. Shop Drawings
2. See Specifications

2 PARALLEL GRANITE BENCH
SCALE: 1/2" = 1'-0"

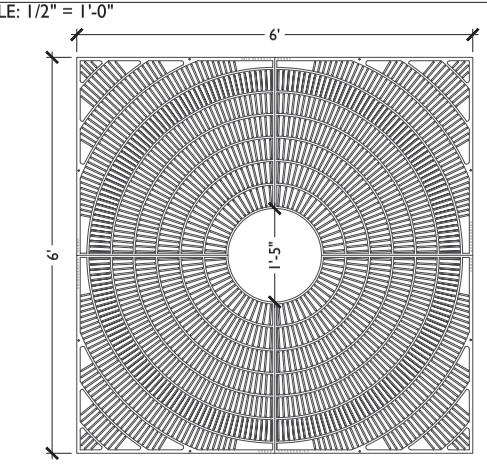

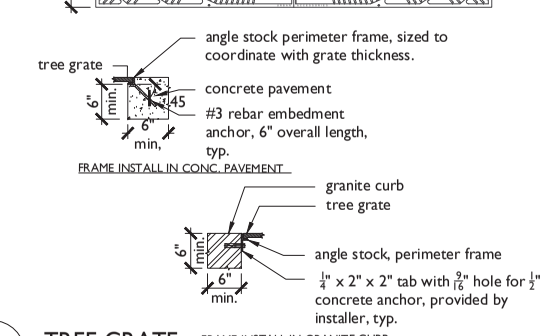

3 TREE GRATE FRAME INSTALL IN GRANITE CURB
SCALE: NTS

PETER QUINN ARCHITECTS
ARCHITECTURE PLANNING COMMUNITY DESIGN
PETER QUINN ARCHITECTS LLC
259 ELM ST, SUITE 301
SOMERVILLE MA 02144
PH 617-354-3989 FAX 617-868-0280

SEAL

CONSULTANT
VERDANT LANDSCAPE ARCHITECTURE
617.738.1180

CONSULTANT

PROJECT
THE BRADFORD
BELMONT, MA

PREPARED FOR
Toll Brothers
BELMONT RESIDENTIALS, LLC
BELMONT RESIDENTIAL, LLC
NEEDHAM, MA

DRAWING TITLE
Landscape Site Details Streetscape

SCALE AS NOTED

REVISION	DATE
SP REV. #3G	18 June 2013
DEFINITIVE PLAN	AUG. 15, 2017

DRAWN BY	REVIEWED BY
KP	BH

SHEET
LD6
2

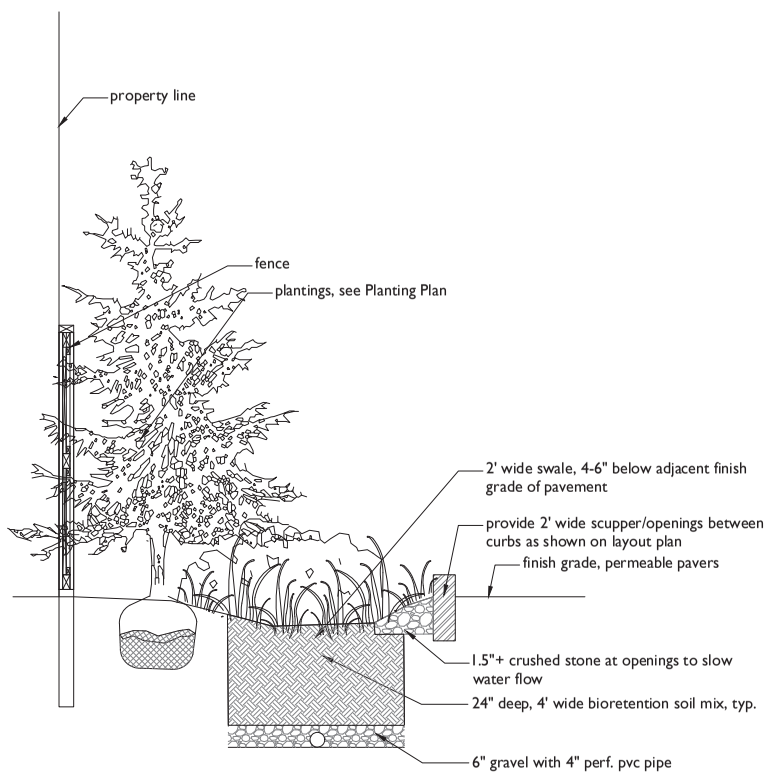

3 STORMWATER PLANTER - SECTION
SCALE: 1/2" = 1'-0"

Planters: FRP 2'x4' Rect. 'Wilshire' style
Available: Tournesol Siteworks

2 PLANTERS AT ROOFDECK
SCALE: 3/4" = 1'-0"

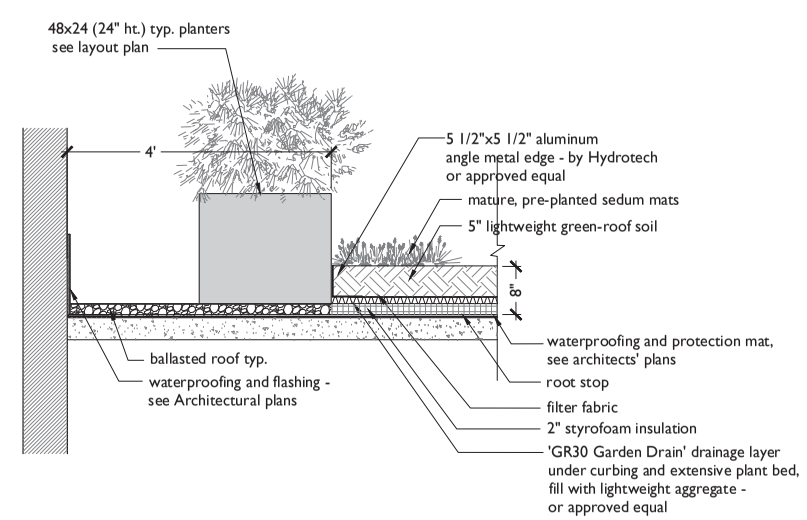

1 EXTENSIVE GREENROOF SECTION
SCALE: 3/4" = 1'-0"

PETER QUINN ARCHITECTS
ARCHITECTURE
PLANNING
COMMUNITY DESIGN

PETER QUINN ARCHITECTS LLC
259 ELM ST, SUITE 301
SOMERVILLE MA 02144
PH 617-354-3989 FAX 617-868-0280

SEAL

CONSULTANT
VERDANT LANDSCAPE ARCHITECTURE
617.738.1180

CONSULTANT

PROJECT
THE BRADFORD
BELMONT, MA

PREPARED FOR
Toll Brothers
BELMONT RESIDENTIALS, LLC
BELMONT RESIDENTIAL, LLC
NEEDHAM, MA

DRAWING TITLE
Details
Planting

SCALE AS NOTED

REVISION	DATE
2 GARAGE SET	AUG. 15, 2017
DEFINITIVE PLAN	AUG. 15, 2017

DRAWN BY	REVIEWED BY
KP	BH

SHEET
LD7
2

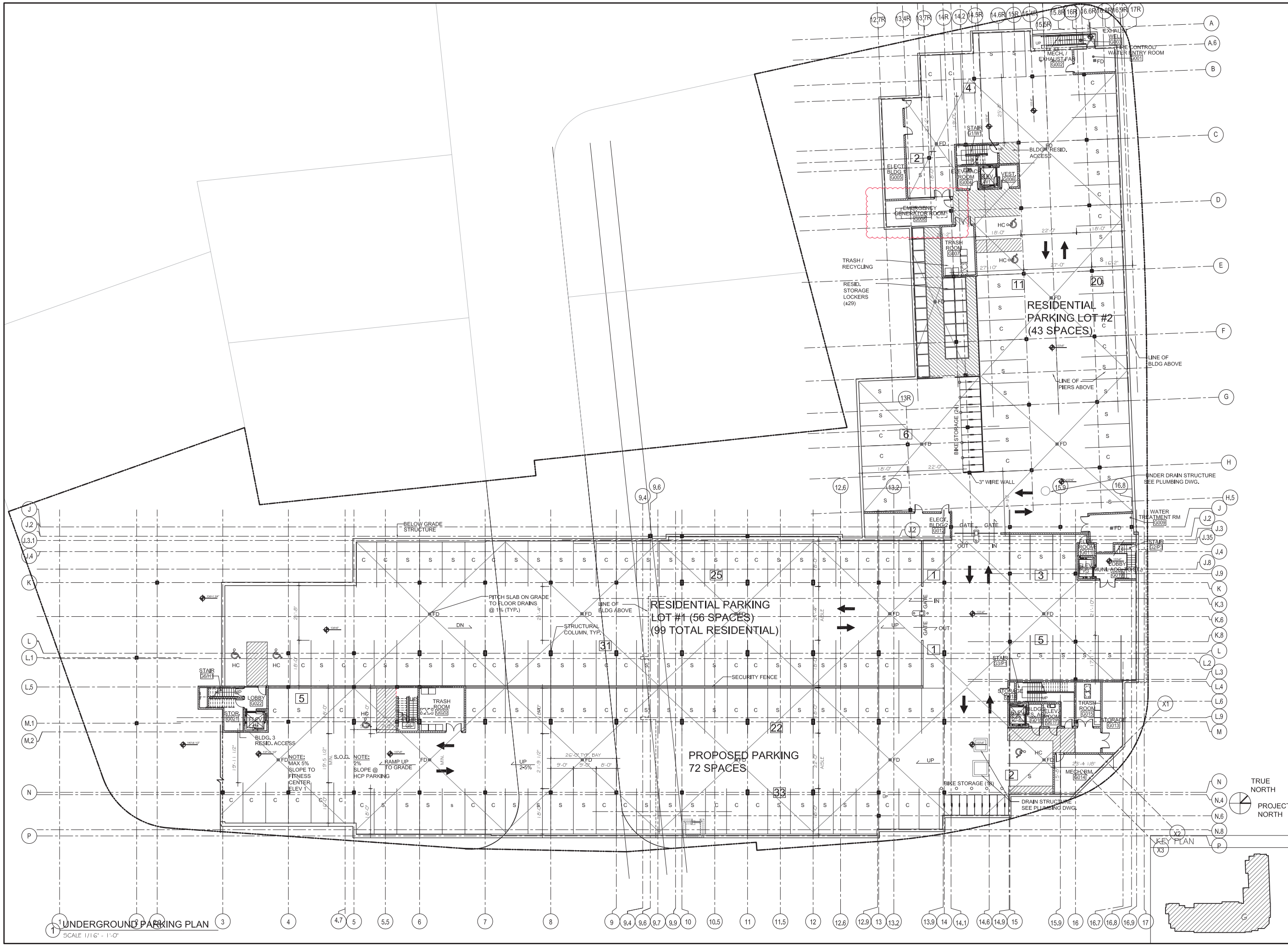

UNDERGROUND PARKING PLAN

SCALE 1/16" = 1'-0"

PETER QUINN ARCHITECTS

ARCHITECTURE
PLANNING
COMMUNITY DESIGN

PETER QUINN ARCHITECTS LLC
259 ELM ST, SUITE 301
SOMERVILLE MA 02144
PH 617-354-3989 FAX 617-868-0280

SEAL

CONSULTANT

CONSULTANT

PROJECT

THE BRADFORD
BELMONT, MA

PREPARED FOR

Toll Brothers
BELMONT RESIDENTIAL, LLC
BELMONT RESIDENTIAL, LLC
NEEDHAM, MA

DRAWING TITLE

FOUNDATION PLAN

SCALE AS NOTED

REVISION	DATE
REVISED DEFINITIVE PLAN SET	FEB 06, 2018
DEFINITIVE PLAN SET	AUG 31, 2017
BUILDING PERMIT	JULY 07, 2017
80% PROGRESS	JUNE 15, 2017
99% FOUNDATION & PODIUM SET	MAY 22, 2017
FOUNDATION AND PODIUM BID SET	APRIL 14, 2017

DRAWN BY	REVIEWED BY
AMF	PQ

SHEET

A1.0

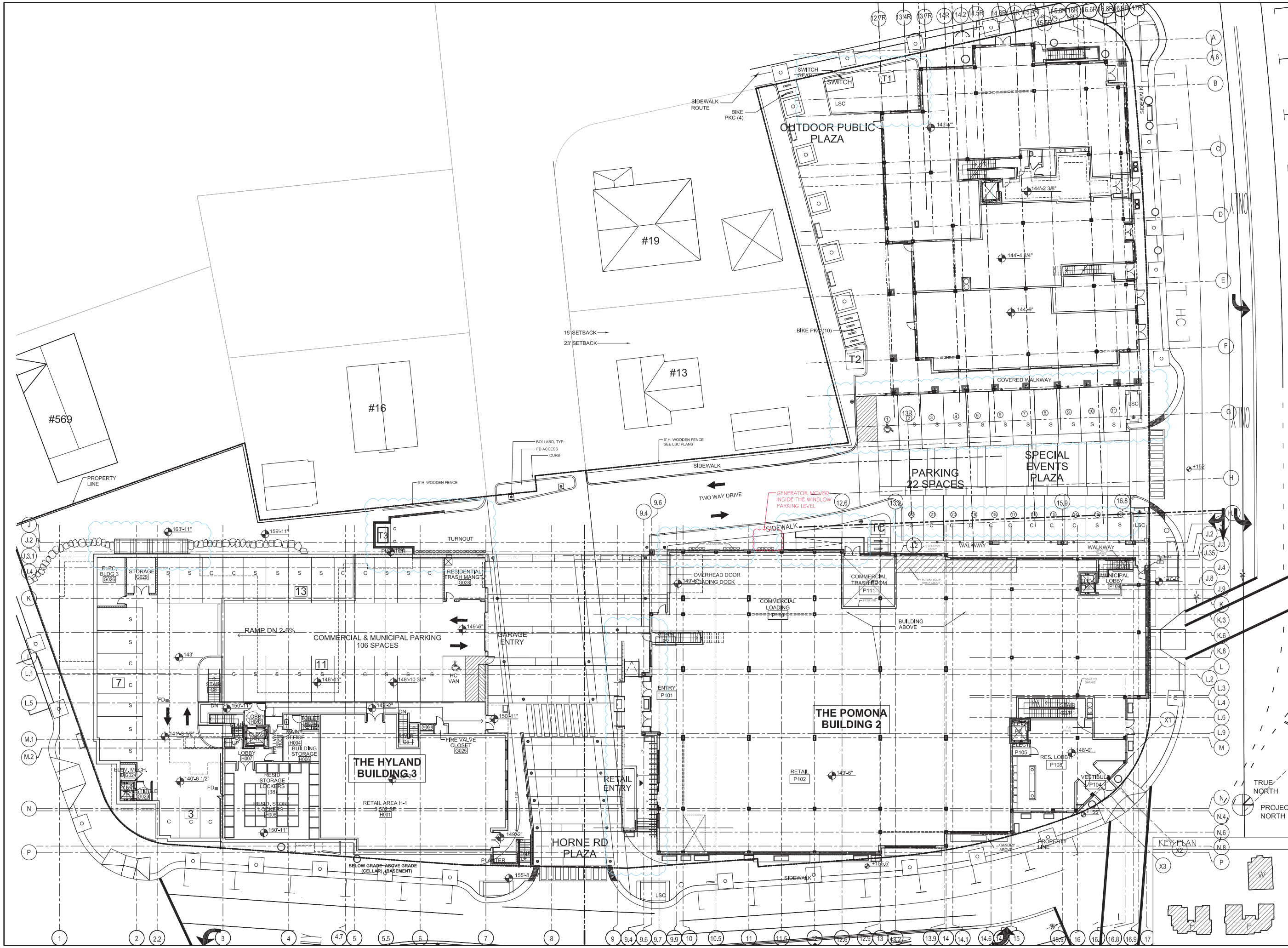

PETER QUINN ARCHITECTS

ARCHITECTURE
PLANNING
COMMUNITY DESIGN

PETER QUINN ARCHITECTS LLC
259 ELM ST, SUITE 301
SOMERVILLE MA 02144
PH 617-354-3989 FAX 617-868-0280

SEAL

CONSULTANT

CONSULTANT

PROJECT
THE BRADFORD
BELMONT, MA

PREPARED FOR
Toll Brothers
BELMONT RESIDENTIAL, LLC
BELMONT RESIDENTIAL, LLC
NEEDHAM, MA

DRAWING TITLE
SITE PLAN / BLDG PLAN AT GRADE HYLAND PARKING ENTRY LEVEL

SCALE AS NOTED

REVISION	DATE
REVISED DEFINITIVE PLAN SET	FEB 06, 2018
DEFINITIVE PLAN SET	AUG 31, 2017
BUILDING PERMIT	JULY 07, 2017
80% PROGRESS	JUNE 15, 2017
99% FOUNDATION & PODIUM SET	MAY 22, 2017
FOUNDATION AND PODIUM BID SET	APRIL 14, 2017

DRAWN BY AMF

REVIEWED BY PQ

SHEET
A1.1

PETER QUINN ARCHITECTS

ARCHITECTURE
PLANNING
COMMUNITY DESIGN

PETER QUINN ARCHITECTS LLC
259 ELM ST, SUITE 301
SOMERVILLE MA 02144
PH 617-354-3989 FAX 617-868-0280

SEAL

CONSULTANT

CONSULTANT

PROJECT

THE BRADFORD
BELMONT, MA

PREPARED FOR

Toll Brothers
BELMONT RESIDENTIAL, LLC
BELMONT RESIDENTIAL, LLC
NEEDHAM, MA

DRAWING TITLE

SECOND LEVEL PLAN
HYLAND FIRST LEVEL

SCALE AS NOTED

REVISION	DATE
REVISED DEFINITIVE PLAN SET	FEB 06, 2018
DEFINITIVE PLAN SET	AUG 31, 2017
BUILDING PERMIT	JULY 07, 2017
80% PROGRESS	JUNE 15, 2017
99% FOUNDATION & PODIUM SET	MAY 22, 2017
FOUNDATION AND PODIUM BID SET	APRIL 14, 2017

DRAWN BY: AMF

REVIEWED BY: PQ

SHEET

A1.2