**OFFICE OF COMMUNITY DEVELOPMENT**
**TOWN OF BELMONT**
19 Moore Street
Homer Municipal Building
Belmont, Massachusetts 02478-0900

# BELMONT HISTORIC DISTRICT COMMISSION

**CASE NUMBER: HDC Case 23-02**
**APPLICANT:** STEPHEN C. KNIGHT
**PROPERTY:** 504 CONCORD AVENUE
**PUBLIC HEARING:** February 14, 2023

Dear Mr. Knight,

This letter is to inform you that the Historic District Commission (HDC) voted unanimously to grant a sixth one-year extension on the Certificate of Appropriateness (HDC Case 20-02) originally granted on January 10, 2017; and subsequently extended on February 13, 2018; February 28, 2019; January 14, 2020; February 9, 2021; and February 8, 2022. Additionally, they HDC voted to grant a fourth one-year extension on the Certificate of Appropriateness originally granted on February 28, 2019 (HDC Case 19-08) and subsequently extended on January 14, 2020; February 9, 2021; and February 8, 2022.

Please note that this extension is only for the approved scope of work outlined and conditioned on the original Certificates. Any revisions to the scope will require additional review and approval by the HDC.

If work has not commenced by February 14, 2024, you will need to file for an additional one-year extension prior to expiration. Note both cases (HDC Case 16-12 and HDC case 19-02) have been combined in to one case, HDC Case 20-02, now known as Case 23-02).

A copy of the original Certificates of Appropriateness is attached with this letter, both of which are also held on file with the Office of Community Development.

On behalf of the Historic District Commission,

_____

Office of Community Development

# GREGORY LOMBARDI DESIGN

*Landscape Architecture*

15 January 2024

Knight Residence
504 Concord Avenue
Belmont, MA

RE: HDC Approval Extension Request for HDC Case 23-02

Dear Belmont Historic District Commission,

We would like to request an extension to the approval we received from the Commission in February 2023. Case 23-02 includes multiple submittals that were previously approved and were combined into one case number at the meeting in February 2022. We then received further extension approval in February 2023 in part due to a traumatic accident suffered by one of the Knight children and dealing with the ongoing health issues of Mr. Knight's father. There are no changes or amendments to the package that was approved last year, but we are asking for another year of extension at this time.

Significant progress on the project has been made and budget discussions with Kistler & Knapp Construction have occurred but we need to complete construction documents and finalize negotiations with the contractor. Complicating matters this year and mitigating factors were finding contractors with capacity for this project. Furthermore, and perhaps most importantly, Steve Hart who has been the acting architect on this project and previous projects for the Knights (including the historic restoration of the carriage house and greenhouse) is retiring. A new architect, Ruth Bennett, of RBA Architecture Inc. has been selected and is being brough up to speed. As a result, we would like to request an additional extension to the previously approved drawings. Again, there are no changes or amendments to the package that was approved last year.

Thank you,

Stephen Knight

Ruth Bennett
RBA Architecture Inc.

Elizabeth Kenrick
Gregory Lombardi Design Incorporated

221 BOSTON ROAD, BILLERICA, MASSACHUSETTS 01862

T. 617.492.2808 WWW.LOMBARDIDESIGN.COM

COMMUNITY DEVELOPMENT
2017 JAN -5 PM 6:04

# BELMONT HISTORIC DISTRICT

Historic District Commission
Town Hall
Belmont, Mass. 02478

## APPLICATION FOR CERTIFICATE OF APPROPRIATENESS

Application is hereby made for the issuance of a Certificate of Appropriateness under the provisions of the General Laws, Chapter 40C amended and the Belmont By-laws, Article 15, a copy of which is in the office of the Town Clerk.

SEE INSTRUCTIONS ATTACHED – TYPE OR PRINT

FOR OFFICE USE ONLY

Application No. _____
Received _____ By _____
Hearing Date 12/13/16, continued to 1/10/17
Application Returned _____
Approved 1/10/17 as per amendment + conditions stated below. Lauren Smith

1. ADDRESS 504 CONCORD AVENUE PRECINCT 3
2. NAME OF BUSINESS OR PROPERTY KNIGHT RESIDENCE

3. APPLICANT GREGORY LOMBARDI DESIGN, INC. Phone 617.492.2808
Address 2235 MASSACHUSETTS AVE, CAMBRIDGE, MA Zip Code 02140
4. PROPERTY OWNER* STEPHEN AND LISA KNIGHT Phone 617.231.2401
Address 504 CONCORD AVE, BELMONT, MA Zip Code 02478
5. ARCHITECT (if applicable) HART ASSOCIATES ARCHITECTS Phone 617.489.0030
Address 50 CHURCH ST, BELMONT, MA Zip Code 02478
6. CONTRACTOR (if applicable) R.P. MARZILLI AND CO. Phone 508.533.8700
Address 21 TROTTER DR, MEDWAY, MA Zip Code 02053

7. BRIEF DESCRIPTION OF ALL PROPOSED WORK. (This description provides the basis for the Commission's decision; it must clearly represent the entirety of the project. Use additional pages as necessary.)

LANDSCAPE SITE IMPROVEMENTS, INCLUDING RECONSTRUCTION OF STAIRS TO FRONT ENTRANCE OF RESIDENCE AND SUBTERRANEAN GARAGE/GROTTO. The certificate is amended as follows: New subterranean garage with brick and stone facade, painted wood doors, stone balustrade; landscaped stone walls, stone and gravel pavers, all as shown on attached drawings submitted January 10, 2017 by Gregory Lombardi Landscape Design and Hart Associates, architects. Additional product materials related to wood garage doors and exterior lighting should be submitted prior to construction.

8. Does the proposed work require other permits or approvals (other than a building permit)? If yes, indicate: To be confirmed by Office of Community Development.

N/A

9. DOCUMENTATION ATTACHED (see instructions):

A. ☑ Photographs
B. ☑ Site Plan
C. ☐ Floor Plans
D. ☐ Roof Plan
E. ☑ Elevations & Sections
F. ☑ Detail Drawings
G. ☐ Manufacturer's product literature/specifications
H. ☐ Zoning compliance/non-compliance
I. ☐ Model
J. ☐ Other _____

10. SIGNATURES – Both are required

Applicant _____ Date 11.16.16
Owner* _____ Date 11.16.16
*If property is a condominium, the Chairperson must sign.

SCALE DRAWINGS AND PHOTOGRAPHS OF EXISTING CONDITIONS AND ALL PROPOSED WORK MUST BE SUPPLIED BY THE APPLICANT. INSUFFICIENT DOCUMENTATION AND INCOMPLETE APPLICATIONS WILL BE RETURNED.

# 504 Concord Avenue

Belmont, Massachusetts

Historic District Commission Submission

10 January 2017

GREGORY LOMBARDI DESIGN

*Landscape Architecture*

#1 LOOKING NORTH-WEST

#2 LOOKING WEST

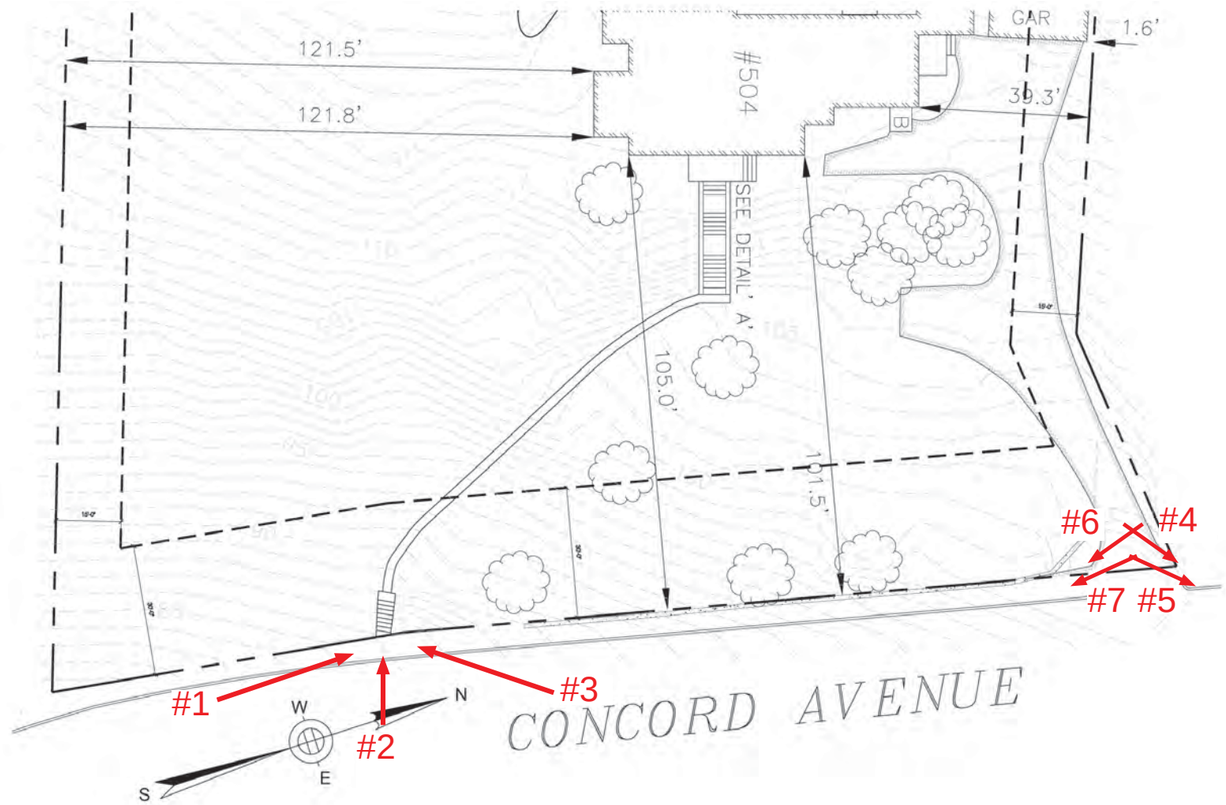

#7 LOOKING SOUTH-EAST

#3 LOOKING SOUTH-WEST

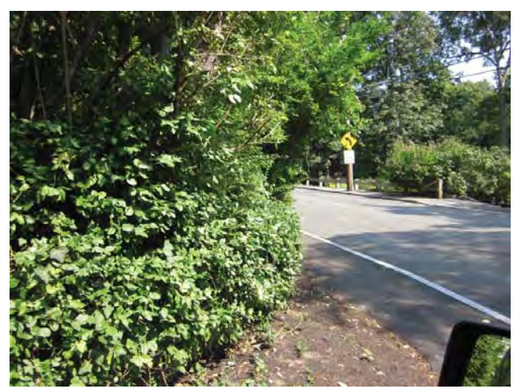

#4 LOOKING NORTH-EAST

#5 LOOKING NORTH-EAST

#6 LOOKING SOUTH-EAST

10 January 2017

GREGORY LOMBARDI DESIGN
Landscape Architecture

Existing Conditions
504 Concord Avenue | Belmont, MA

#1 LOOKING WEST

#2 LOOKING EAST

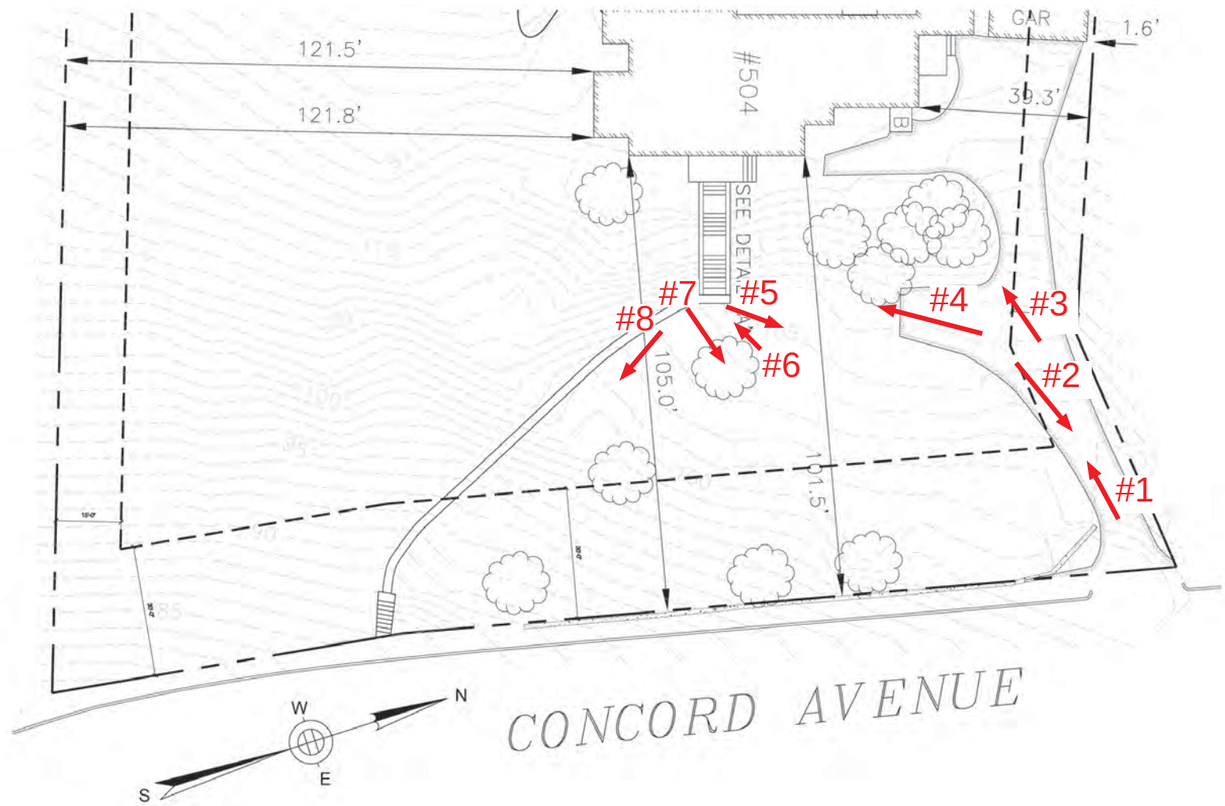

#8 LOOKING SOUTH-EAST

#7 LOOKING NORTH-EAST

#3 LOOKING WEST

#4 LOOKING SOUTH-WEST

#5 LOOKING-NORTH EAST

#6 LOOKING SOUTH-WEST

10 January 2017

GREGORY LOMBARDI DESIGN
Landscape Architecture

# Existing Conditions

504 Concord Avenue | Belmont, MA

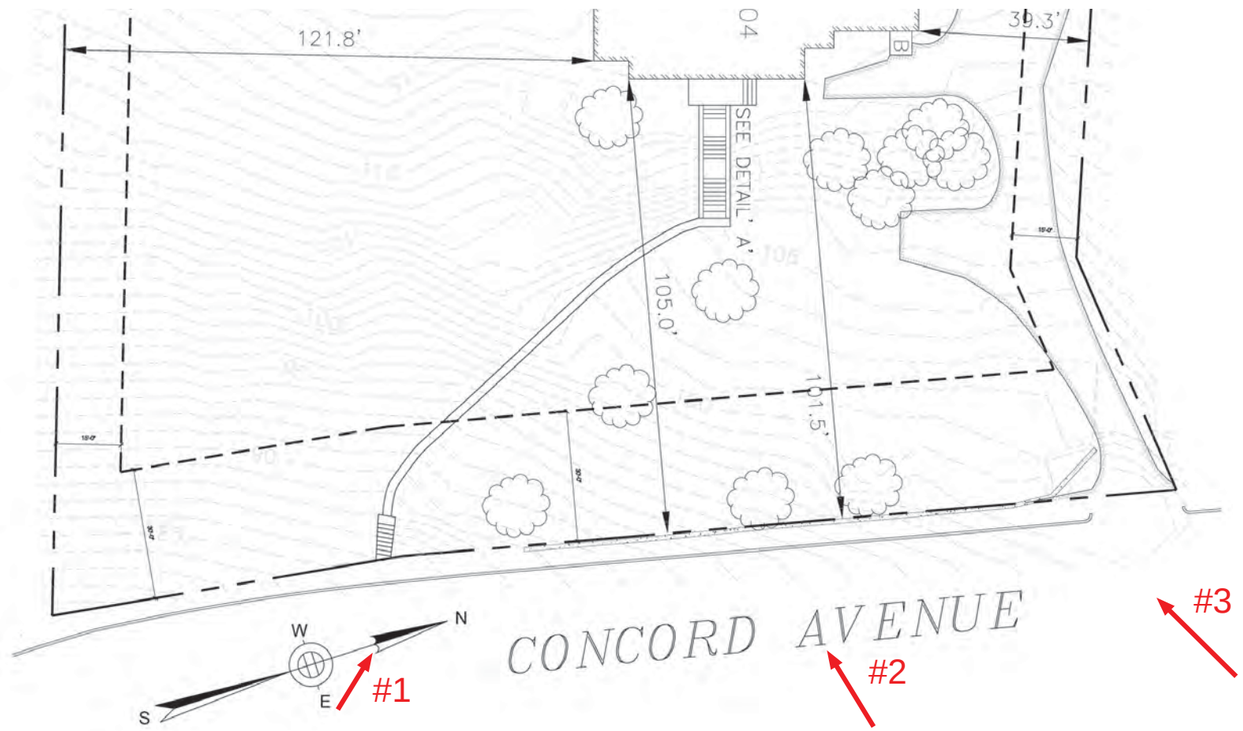

#1

#2

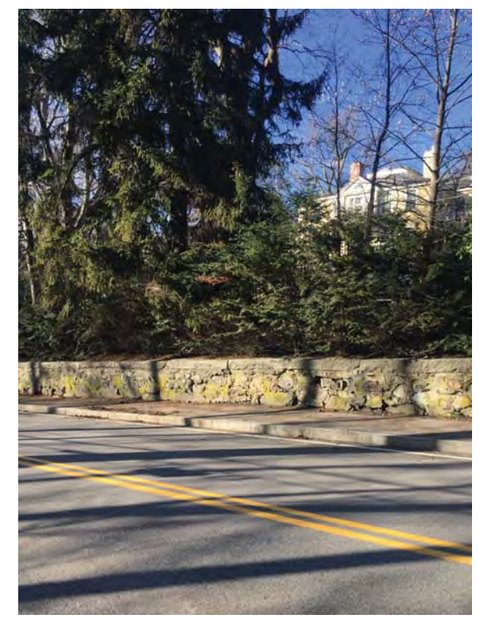

#3

10 January 2017

GREGORY LOMBARDI DESIGN
Landscape Architecture

# Existing Conditions

504 Concord Avenue | Belmont, MA

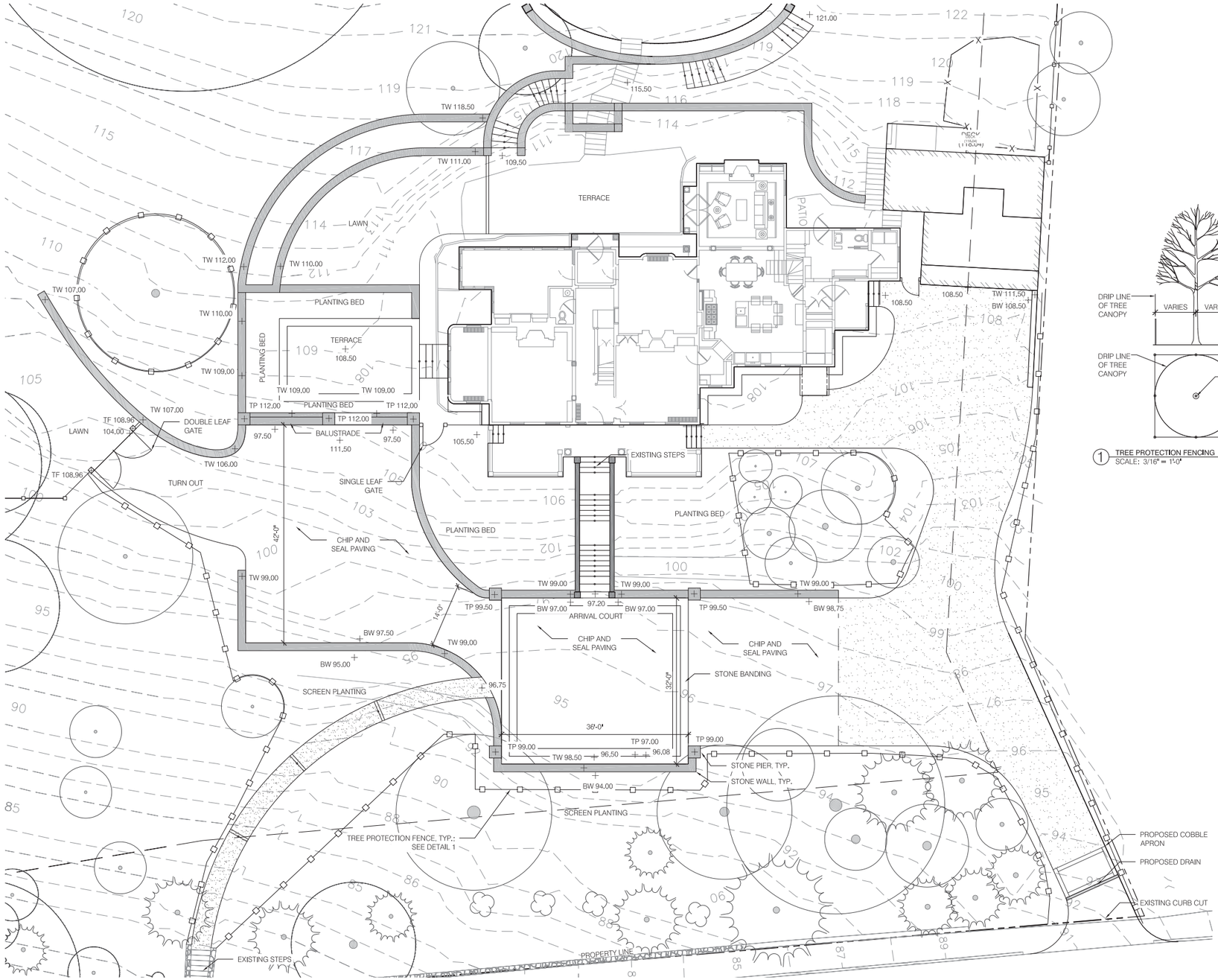


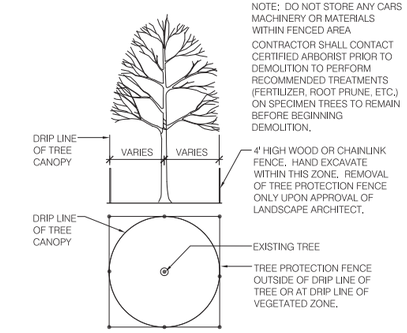


NOTE: DO NOT STORE ANY CARS MACHINERY OR MATERIALS WITHIN FENCED AREA

CONTRACTOR SHALL CONTACT CERTIFIED ARBORIST PRIOR TO DEMOLITION TO PERFORM RECOMMENDED TREATMENTS (FERTILIZER, ROOT PRUNE, ETC.) ON SPECIMEN TREES TO REMAIN BEFORE BEGINNING DEMOLITION.

1 TREE PROTECTION FENCING
SCALE: 3/16" = 1'-0"

**504 Concord Avenue**
**Belmont, MA**

**Design Development**

10 January 2017

GREGORY LOMBARDI DESIGN
Landscape Architecture
2235 Massachusetts Avenue
Cambridge, Massachusetts 02140
Phone 617.492.2808 Fax 617.492.2904

North

0 8'
Scale : 1/8" = 1'-0"

10 January 2017

GREGORY LOMBARDI DESIGN
Landscape Architecture

# Revised Arrival Court Plan

504 Concord Avenue | Belmont, MA

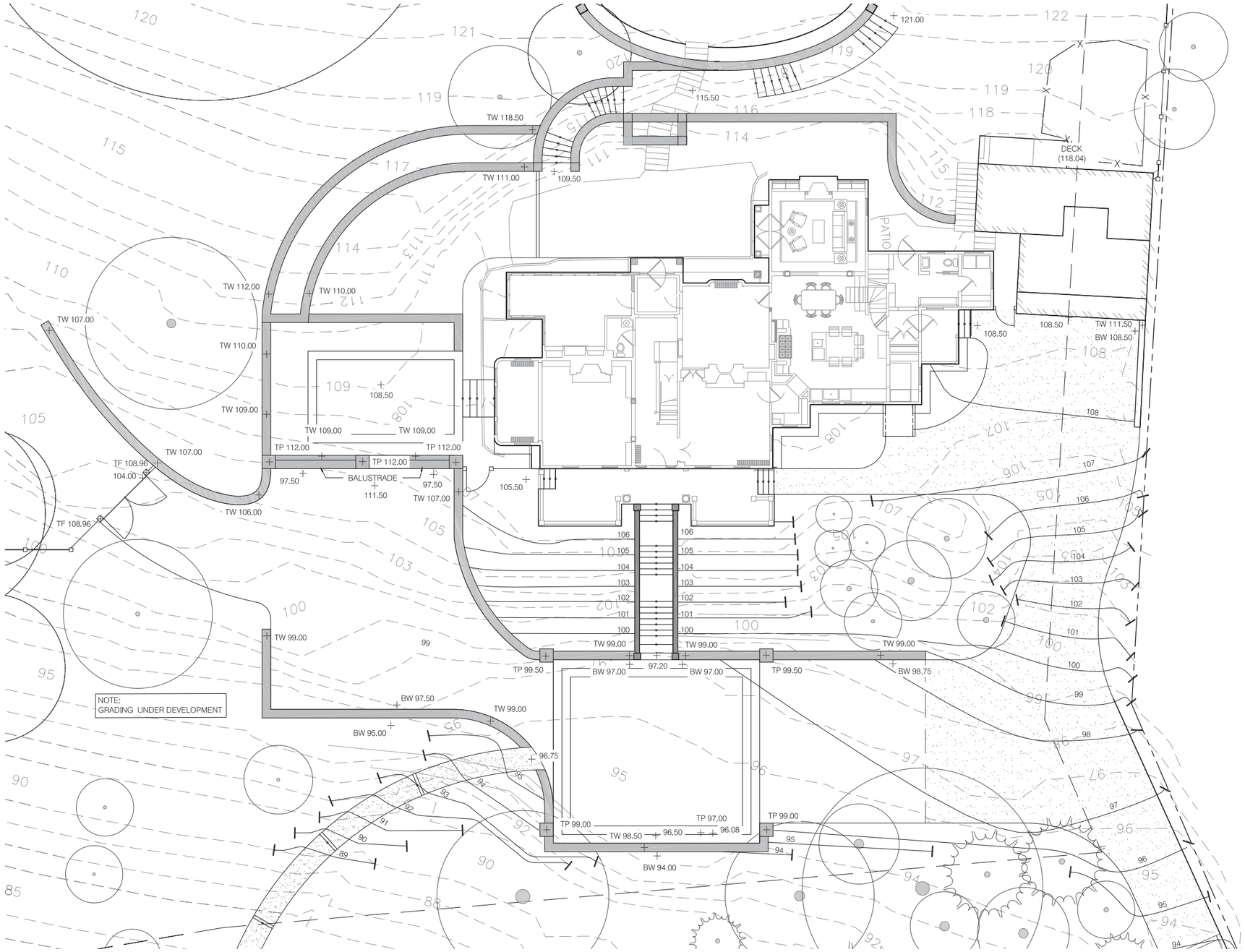


10 January 2017

GREGORY LOMBARDI DESIGN

Landscape Architecture

# Revised Arrival Court - Proposed Grading Plan

504 Concord Avenue | Belmont, MA

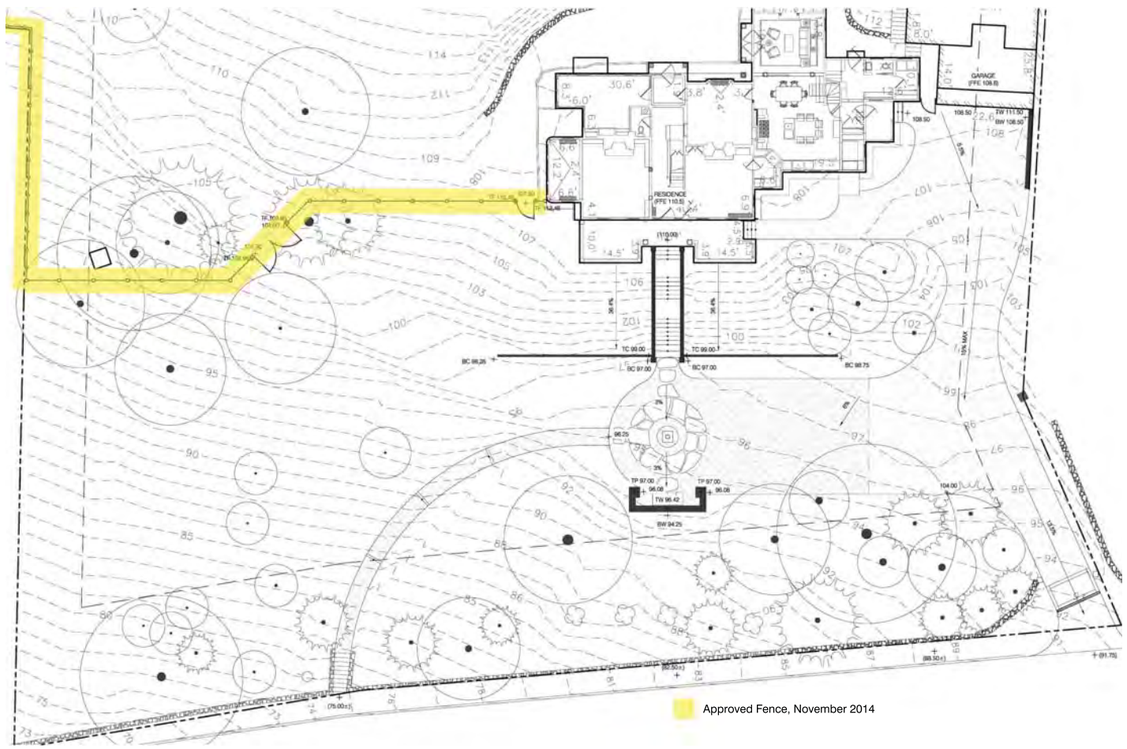


Approved Plan, November 2014

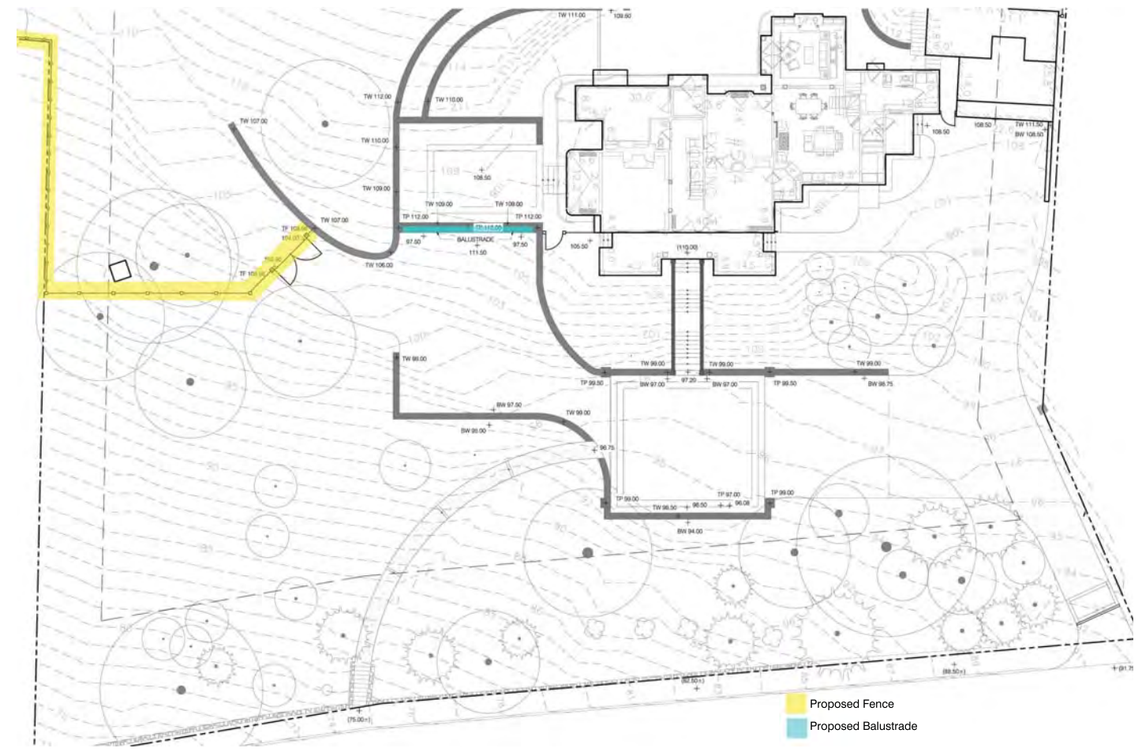


Proposed Plan, January 2017

10 January 2017

GREGORY LOMBARDI DESIGN
Landscape Architecture

# Revised Arrival Court - Fence and Balustrade

504 Concord Avenue | Belmont, MA

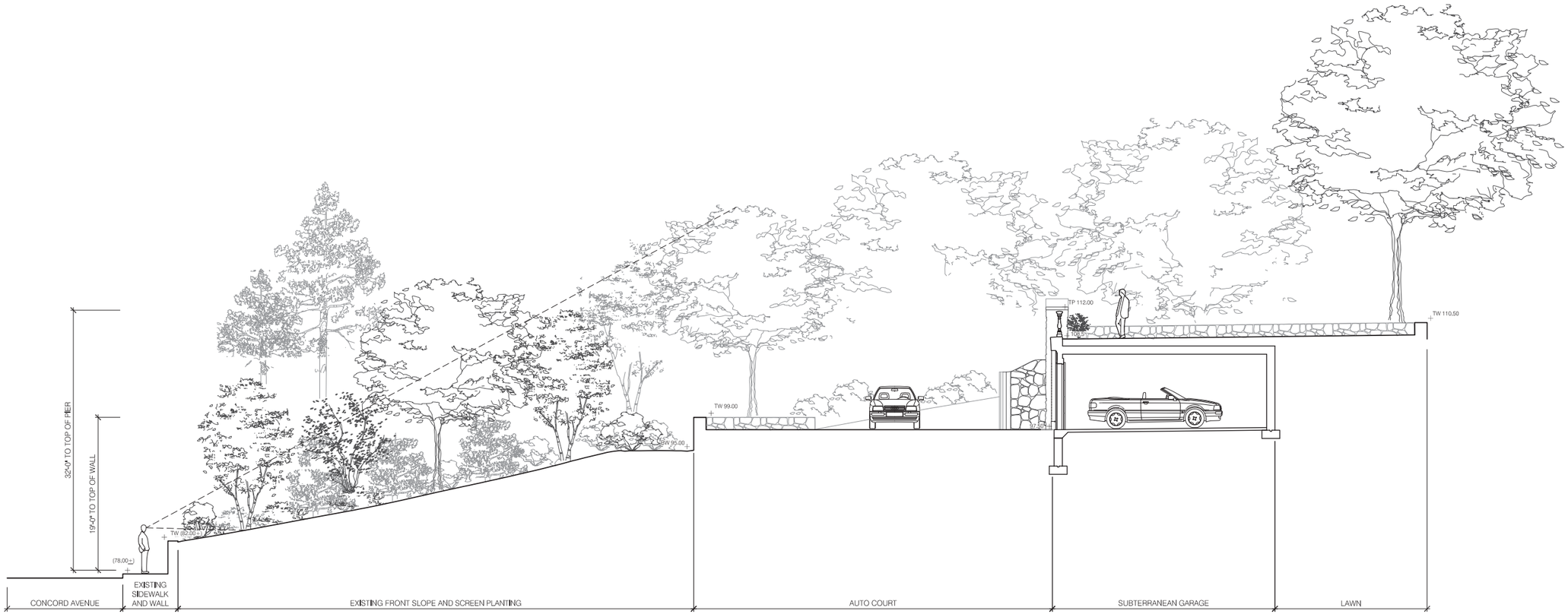


10 January 2017

GREGORY LOMBARDI DESIGN

*Landscape Architecture*

# Revised Arrival Court Section

504 Concord Avenue | Belmont, MA

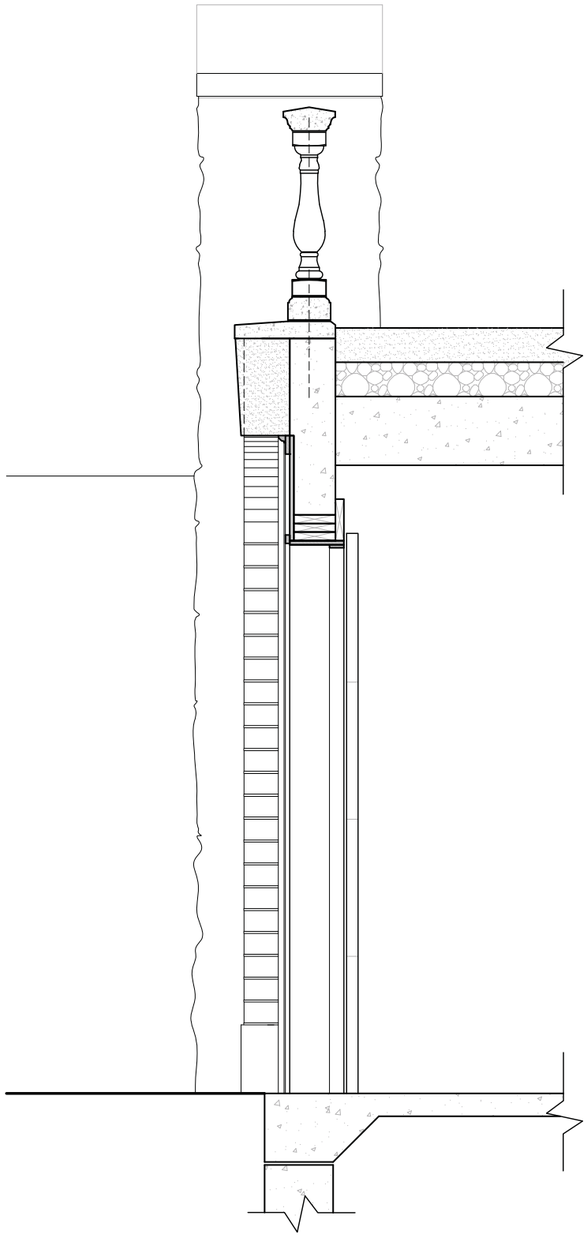

ELEVATION SECTION
SCALE: 1/2" = 1'-0"

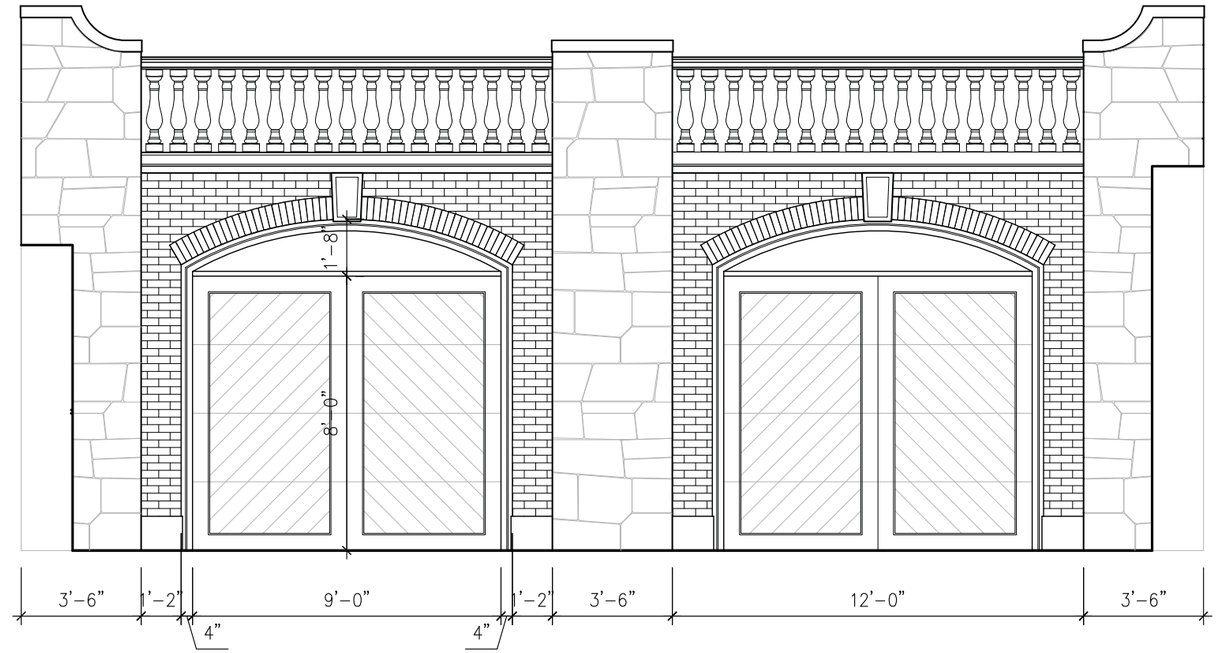


EXTERIOR ELEVATION
SCALE: 1/4" = 1'-0"

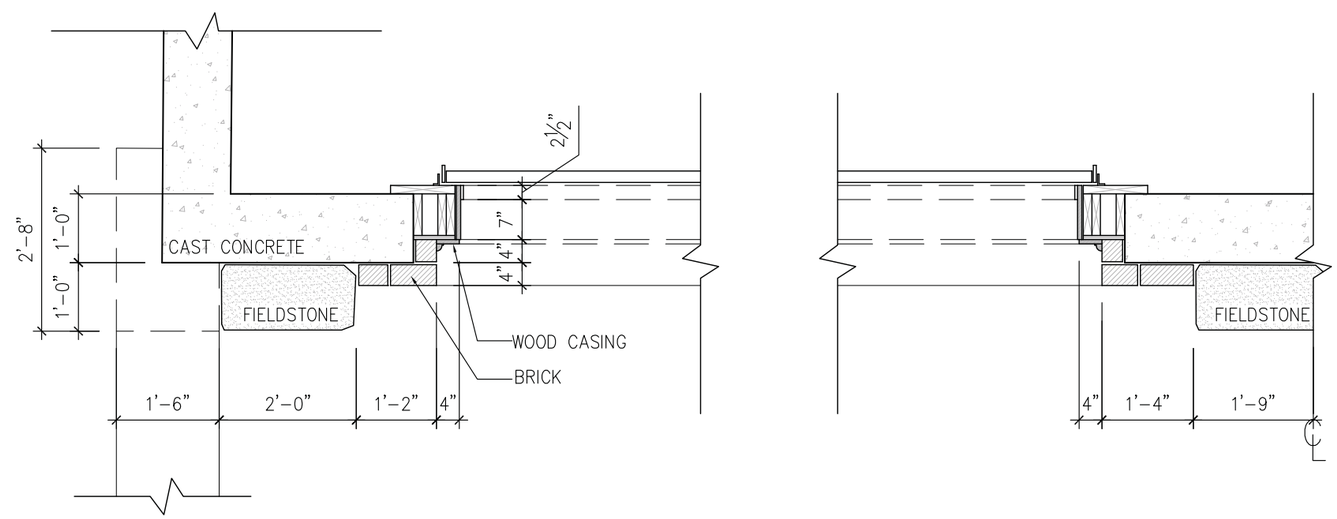


PLAN SECTION
SCALE: 1/2" = 1'-0"


ARCHITECTS
Hart Associates, Inc.
phone 617-489-0030
fax 617-489-0091
50 Church Street
Belmont, Massachusetts
02478


10 January 2017

# Revised Arrival Court - Architectural Elevation and Sections

504 Concord Avenue | Belmont, MA

NOTE:
SEE SNOW MELT LAYOUT PLANS, SHOP DRAWINGS, AND SPECS FOR PRECISE INSTALLATION OF SNOWMELT ELEMENTS AND MATERIALS. INSTALLATION OF SNOWMELT TUBING AND INSULATION TO BE COMPLETED BY A CERTIFIED TECHNICIAN.

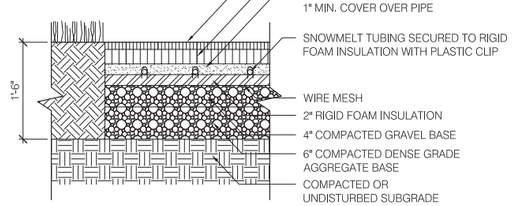


1 BITUMINOUS CONCRETE PAVING
SCALE: 1" = 1'-0" SECTION

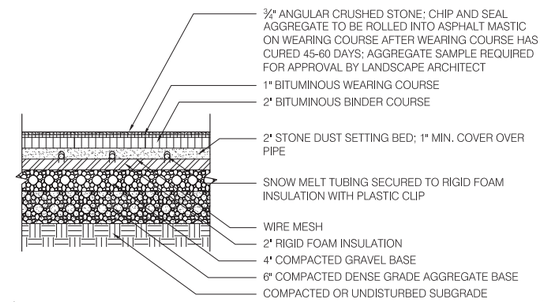


NOTE:
SEE SNOW MELT LAYOUT PLANS, SHOP DRAWINGS, AND SPECIFICATIONS FOR PRECISE INSTALLATION OF SNOW MELT ELEMENTS AND MATERIALS. INSTALLATION OF SNOW MELT TUBING AND INSULATION TO BE COMPLETED BY CERTIFIED TECHNICIAN

2 CHIP AND SEAL BITUMINOUS CONCRETE PAVING
SCALE: 1" = 1'-0" SECTION

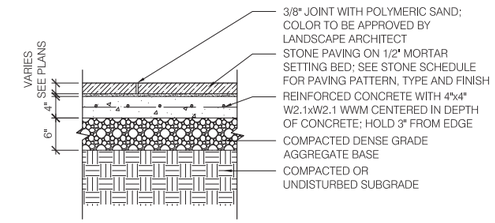


3 STONE PAVING ON CONCRETE
SCALE: 1" = 1'-0" SECTION

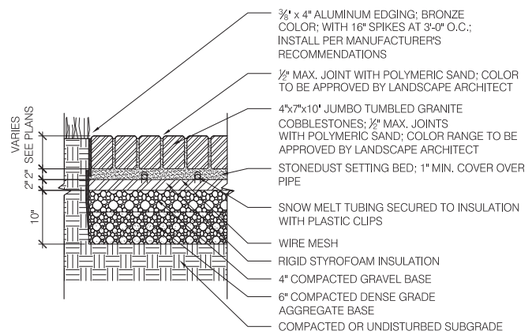


NOTE:
SEE SNOW MELT LAYOUT PLANS, SHOP DRAWINGS, AND SPECIFICATIONS FOR PRECISE INSTALLATION OF SNOW MELT ELEMENTS AND MATERIALS. INSTALLATION OF SNOW MELT TUBING AND INSULATION TO BE COMPLETED BY CERTIFIED TECHNICIAN

4 COBBLE PAVING
SCALE: 1" = 1'-0" SECTION

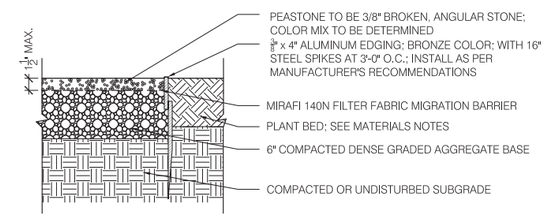


5 PEASTONE PAVING
SCALE: 1 1/2" = 1'-0" SECTION

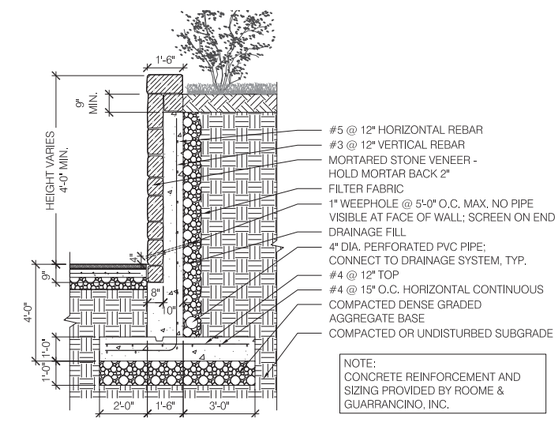


NOTE:
CONCRETE REINFORCEMENT AND SIZING PROVIDED BY ROOME & GUARRANCINO, INC.

6 STRUCTURAL FIELDSTONE VENEER RETAINING WALL
SCALE: 3/8" = 1'-0" SECTION

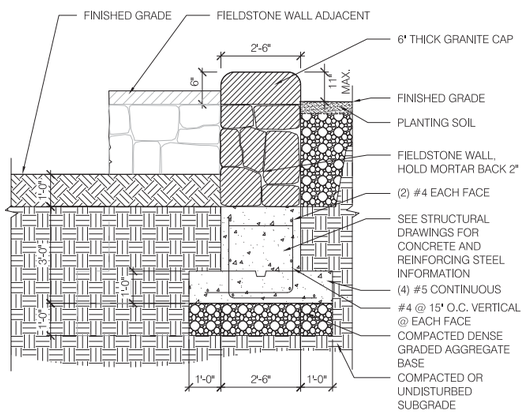


7 FIELDSTONE PIER
SCALE: 1/2" = 1'-0" SECTION

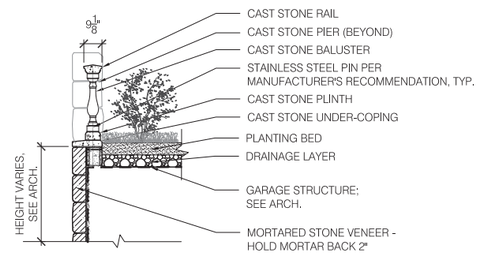


8 BALUSTRADE AT GARAGE WALL
SCALE: 3/8" = 1'-0" SECTION

10 January 2017

GREGORY LOMBARDI DESIGN
Landscape Architecture

# Revised Arrival Court - Landscape Construction Details

504 Concord Avenue | Belmont, MA

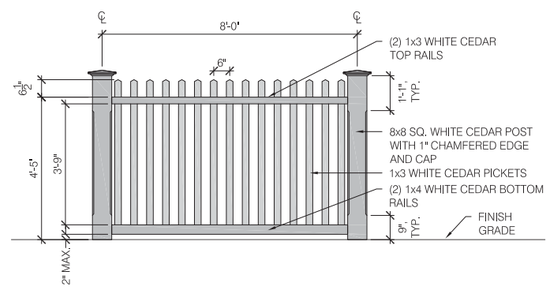


1 POOL ENCLOSURE FENCE
SCALE: 1/2" = 1'-0" ELEVATION

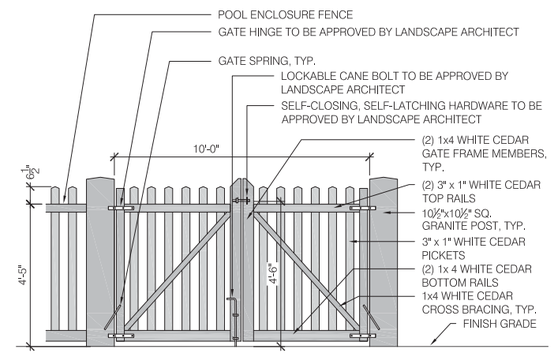


2 POOL ENCLOSURE FENCE - DOUBLE LEAF AT DRIVE
SCALE: 1/2" = 1'-0" ELEVATION

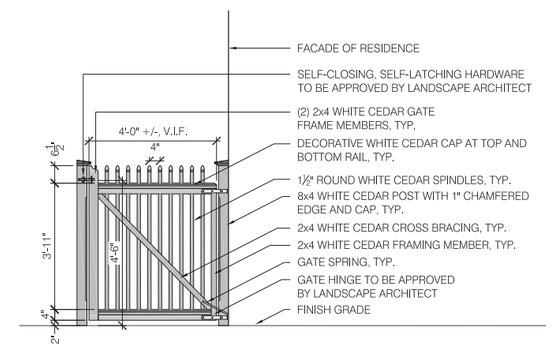


3 POOL ENCLOSURE FENCE - SINGLE LEAF AT HOUSE
SCALE: 1/2" = 1'-0" ELEVATION

10 January 2017

GREGORY LOMBARDI DESIGN
Landscape Architecture

# Revised Arrival Court - Landscape Construction Details

504 Concord Avenue | Belmont, MA

Granite Cobble Stone Pavers

Pea Stone Aggregate

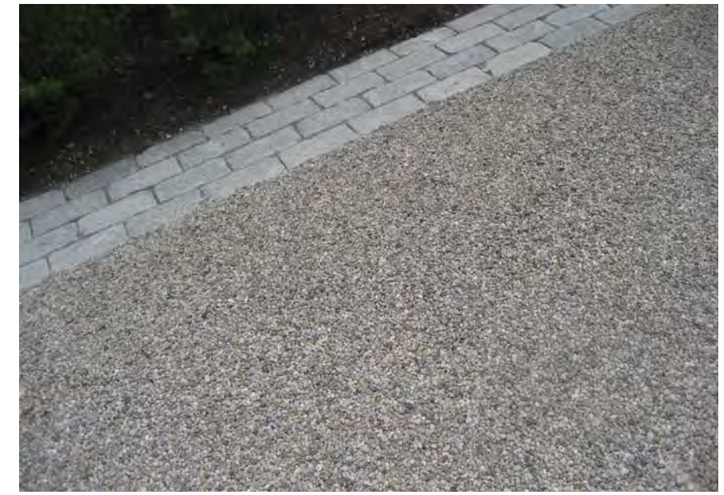

Chip and Seal Pea Stone Aggregate Enlargement

Granite Cap

Stone Wall

Balustrade

10 January 2017

GREGORY LOMBARDI DESIGN
*Landscape Architecture*

# Revised Arrival Court - Character Images

504 Concord Avenue | Belmont, MA

Cedar Pool Fence

Existing Brick Wall

10 January 2017

GREGORY LOMBARDI DESIGN

Landscape Architecture

# Revised Arrival Court - Character Images

504 Concord Avenue | Belmont, MA

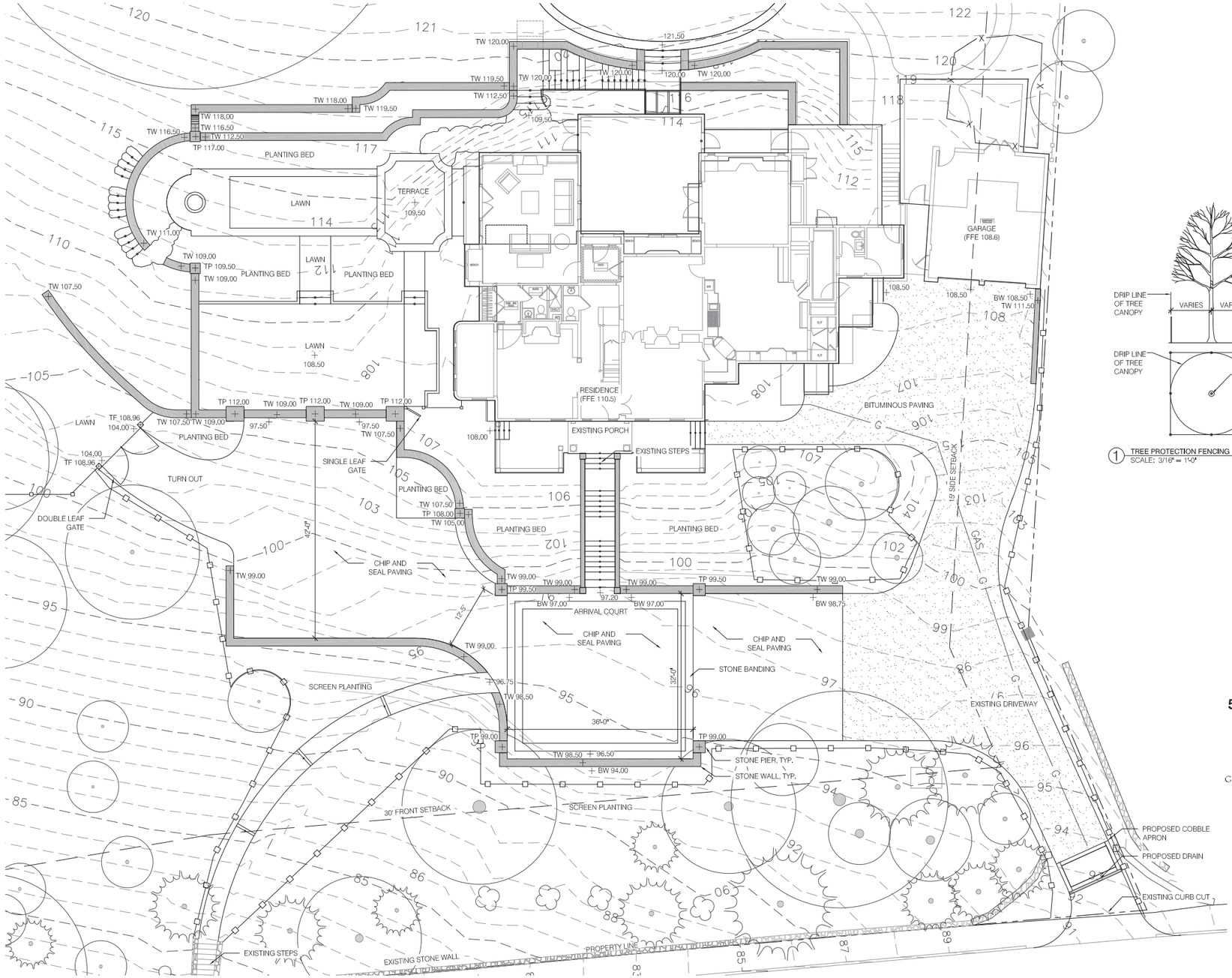


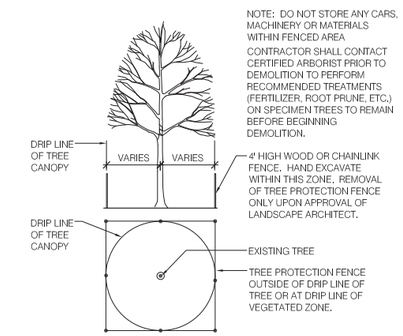


NOTE: DO NOT STORE ANY CARS, MACHINERY OR MATERIALS WITHIN FENCED AREA

CONTRACTOR SHALL CONTACT CERTIFIED ARBORIST PRIOR TO DEMOLITION TO PERFORM RECOMMENDED TREATMENTS (FERTILIZER, ROOT PRUNE, ETC.) ON SPECIMEN TREES TO REMAIN BEFORE BEGINNING DEMOLITION.

1 TREE PROTECTION FENCING
SCALE: 3/16" = 1'-0" PLAN/ELEVATION

**504 Concord Avenue**
**Belmont, MA**

**Design Development**

17 September 2019

GREGORY LOMBARDI DESIGN
Landscape Architecture
2235 Massachusetts Avenue
Cambridge, Massachusetts 02140
Phone 617.492.2808 Fax 617.492.2904

17 September 2019

GREGORY LOMBARDI DESIGN
Landscape Architecture

# Revised Arrival Court Plan

504 Concord Avenue | Belmont, MA

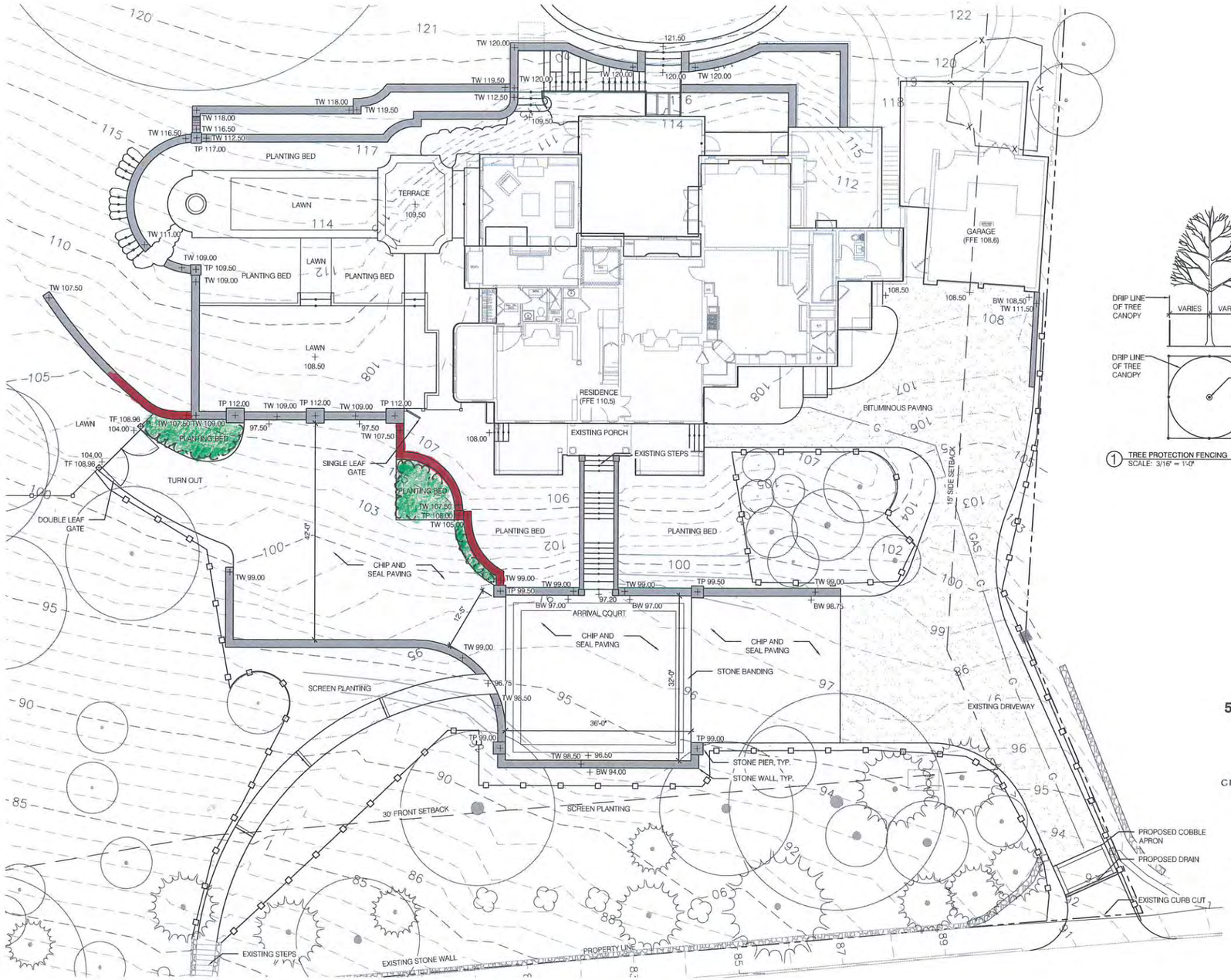


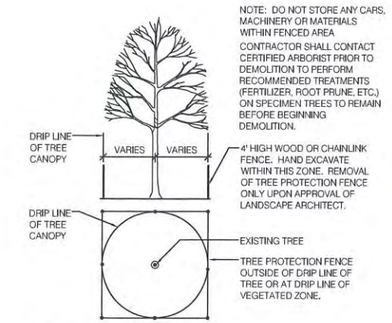


NOTE: DO NOT STORE ANY CARS, MACHINERY OR MATERIALS WITHIN FENCED AREA

CONTRACTOR SHALL CONTACT CERTIFIED ARBORIST PRIOR TO DEMOLITION TO PERFORM RECOMMENDED TREATMENTS (FERTILIZER, ROOT PRUNE, ETC.) ON SPECIMEN TREES TO REMAIN BEFORE BEGINNING DEMOLITION.

1 TREE PROTECTION FENCING
SCALE: 3/16" = 1'-0"
PLAN/ELEVATION

**504 Concord Avenue**
**Belmont, MA**

**Design Development**

17 September 2019

GREGORY LOMBARDI DESIGN
*Landscape Architecture*
2235 Massachusetts Avenue
Cambridge Massachusetts 02140
Phone 617.492.2808 Fax 617.492.3904

North

Scale : 1/8" = 1'-0"

17 September 2019

GREGORY LOMBARDI DESIGN
*Landscape Architecture*

# Revised Arrival Court Plan

504 Concord Avenue | Belmont, MA

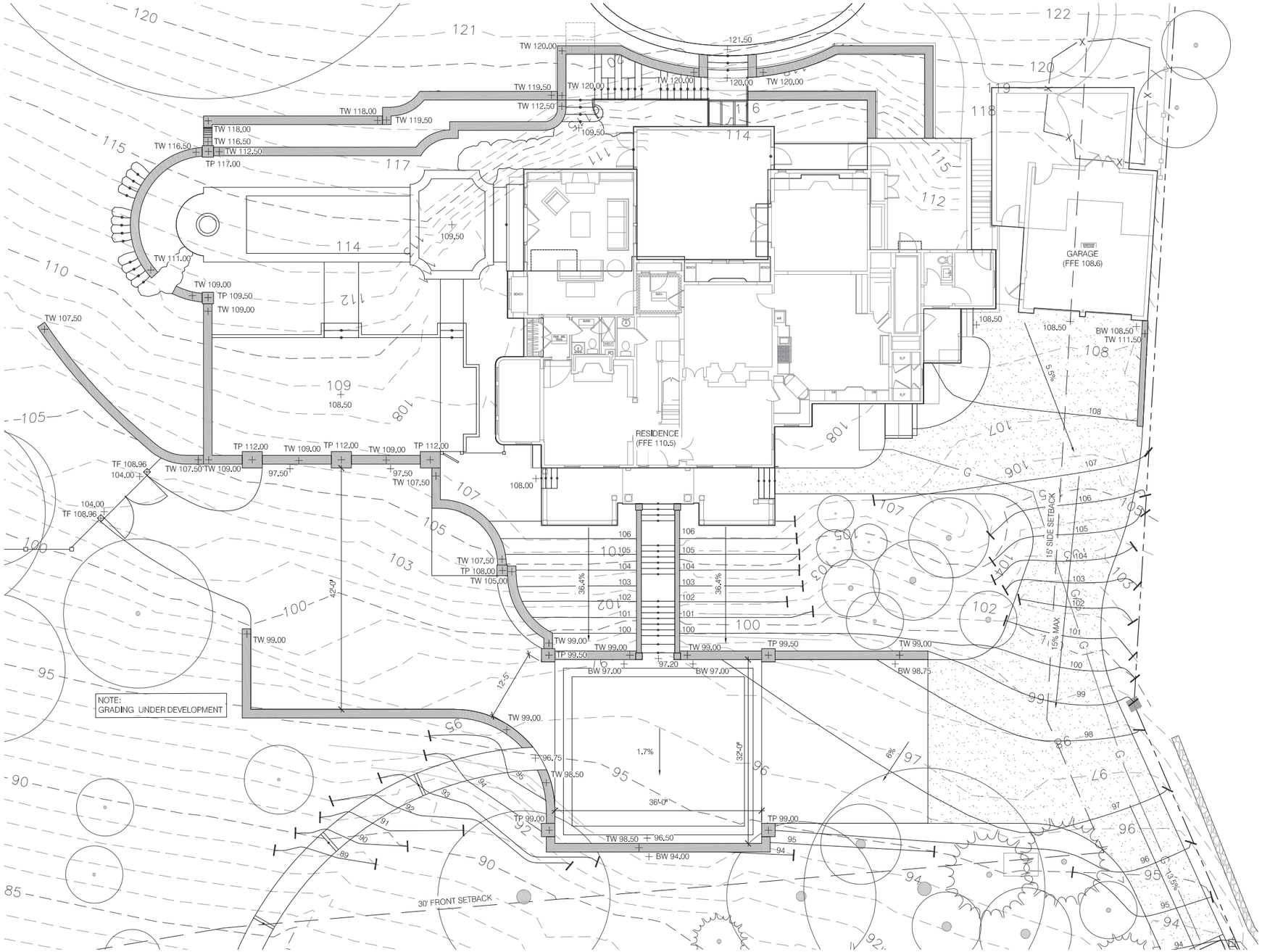


17 September 2019

GREGORY LOMBARDI DESIGN

*Landscape Architecture*

# Revised Arrival Court - Proposed Grading Plan

504 Concord Avenue | Belmont, MA

Town of Belmont
Historic District Commission

# CERTIFICATE OF

_X_ Appropriateness ___Non-Applicability ___Hardship

**Case No.** HDC-19-02 **Approval Date:** February 28, 2019

**Address:** 504 Concord Avenue **Belmont, MA**

**Work Approved:**

1.) Construct balustrade along all four sides at top of roof ridge line on main house, consistent with project approval received in 2005.
2.) Turned balusters, railing, posts and finials to match existing balcony railing over main entry door.
3.) Materials as specified in application: mahogany top and bottom rail; ballusters to be Chemcrest B7624; newell post to be cedar and MDO panel as shown in architect's drawings.

**Conditions:** White paint color to match existing railings.

**Attachments:** HDC application, drawings #1-15 prepared by Hart Associates, Architects

**Date:** March 10, 2019 **HDC Signature:** Lauren G. Meier

**HDC Representative**
Lauren G. Meier, Co-chair

For more information:
Office of Community Development
Homer Municipal Building, 2nd Floor
19 Moore Street
Belmont, MA 02478
617-993-2666

NOTES:
OCD will send the Applicant a copy of this Certificate after it is signed. Please keep a copy for your records.
Submit a copy of the signed Certificate and all attachments with your Building Permit Application.

Confirm that no additional permits or approvals are required before commencing work.

Town Belmont
**Historic District Commission**
Homer Municipal Building, 2nd Floor
19 Moore Street
Belmont, MA 02478

| OFFICE USE |
| --- |
| Case Number: HDC – |
| |

## APPLICATION

In accordance with the Historic Districts Act, MGL Ch 40C, and the Town of Belmont General Bylaws, §40-315, the undersigned applies to the Belmont Historic District Commission for a Certificate of:

☒ Appropriateness ☐ Non-Applicability ☐ Hardship

1. **PRELIMINARY INFORMATION:**

Address of Property: 504 CONCORD AVE.
Property Owner's Name: STEPHEN KNIGHT
Address: 504 CONCORD AVE
Email: STEVECKNIGHT@GMAIL.COM Phone: 617.231.2401

Agent Name: STEPHEN HART / HART ASSOCIATES ARCHITECTS, INC.
Address: 50 CHURCH STREET, BELMONT
Email: STEVE@HARTARCH.COM Phone: 617.489.0030

I am the : ___ Property Owner X Agent
__ Property is Owned by a Corporation, LLC, or Trust (Submit authorization to sign as owner)
__ Property is a Condominium or Cooperative Association (submit authorization to sign as trustee)

*If applicable*: Architect: HART ASSOCIATES ARCHITECTS, INC. Contractor: _____

2. **BRIEF DESCRIPTION OF PROPOSED WORK:**

CONSTRUCT BALUSTRADE - FOUR SIDES AT RIDGE OF MAIN HOUSE. TURNED BALUSTERS, RAILING, POSTS, FINIALS - TO MATCH EXISTING BALCONY RAILING (OVER MAIN ENTRY DOOR.)

3. **SIGNATURES:**

As Owner, I make the following representations:

A. I hereby certify that I am the Owner of the Property at: 504 CONCORD AVE.
B. I hereby certify that if an Agent is listed on this Application, this Agent has been authorized to represent this Application before the Belmont Historic District Commission.

Owner: _____ Date: _____

As Applicant/Agent, I make the following representations:

1. The information supplied on and in this Application is accurate to the best of my knowledge;
2. I will make no changes to the approved plans without prior approval from the Belmont Historic District Commission.

Applicant/Agent: Stephen K Hart Date: 1.25.19
HART ASSOC. ARCHITECTS, INC

* Incomplete applications and Insufficient documentation will not be accepted. *

Approved March 23, 2017

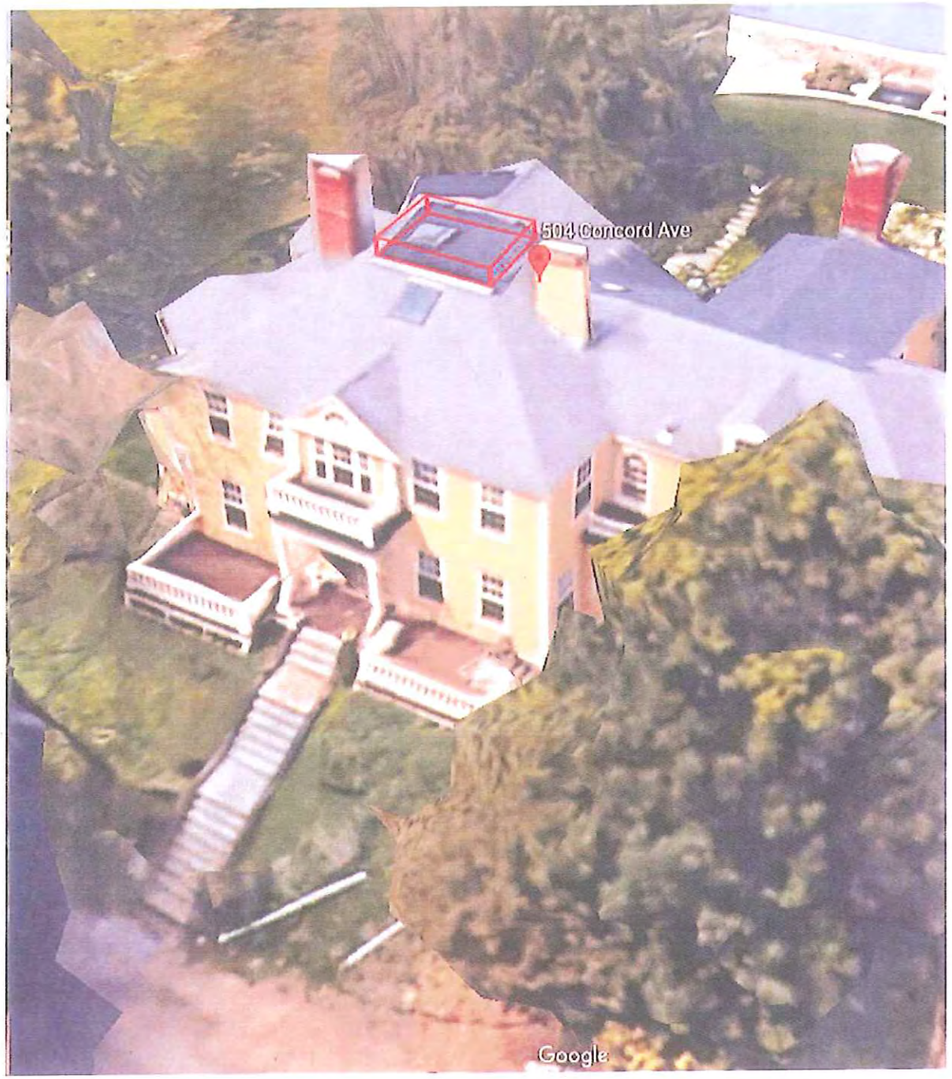


location of proposed balustrade shown in red above

view from Concord Avenue

east side - front entry

**504 Concord Avenue, Belmont, Massachusetts**
Application for Certificate of Appropriateness
Historic District Commission

existing balustrade at balcony

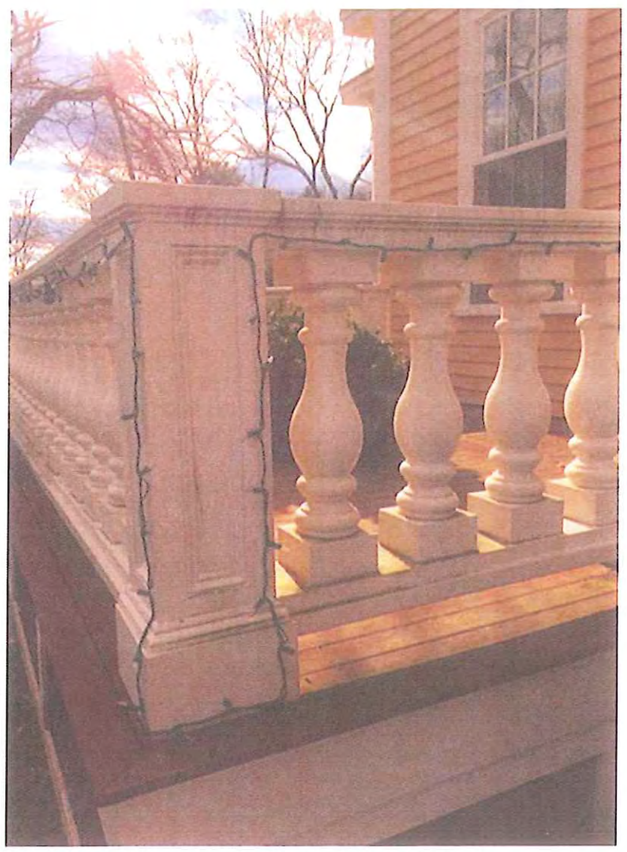

existing balustrade at porch

south side of house

northeast side of house

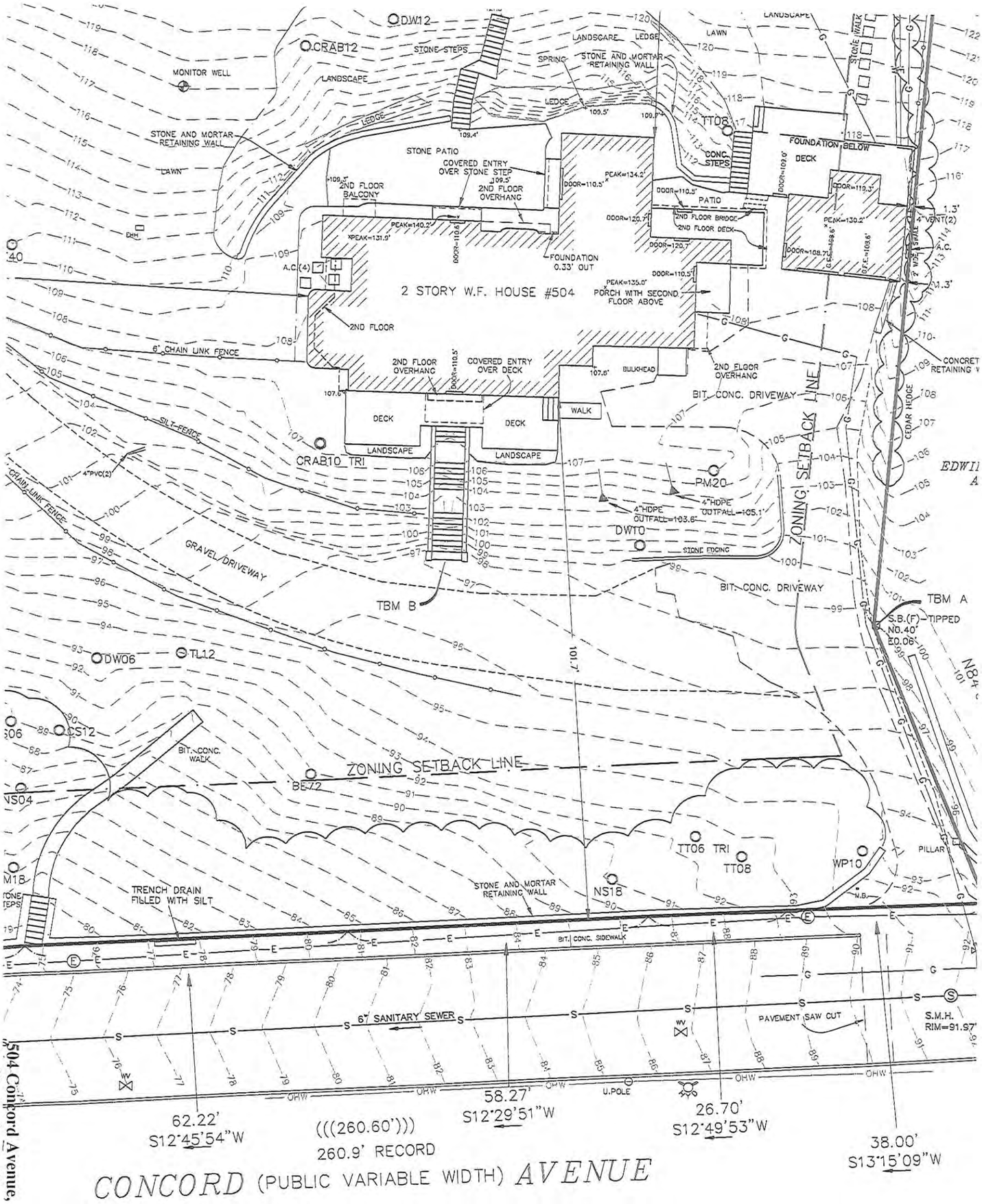


**504 Concord Avenue, Belmont, Massachusetts**
Application for Certificate of Appropriateness
Historic District Commission

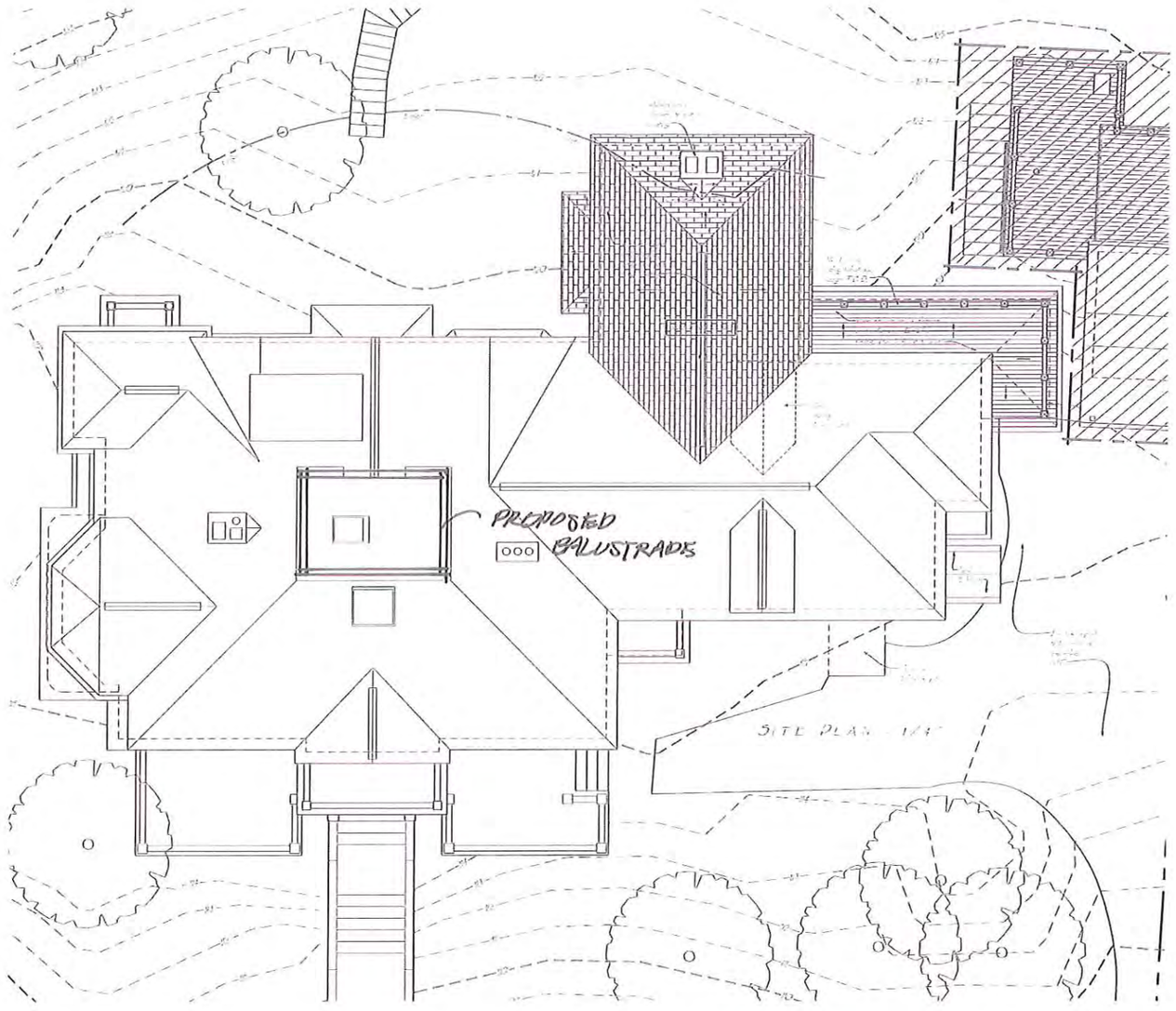


ROOF PLAN

N.T.S.

EAST ELEVATION

1/8" = 1'-0"

EAST ELEVATION (PARTIAL)

SCALE: 1/4"= 1'-0"

**504 Concord Avenue, Belmont, Massachusetts**
Application for Certificate of Appropriateness
Historic District Commission

NORTH ELEVATION

SCALE: 1/4"= 1'-0"

**504 Concord Avenue, Belmont, Massachusetts**
Application for Certificate of Appropriateness
Historic District Commission

SOUTH ELEVATION
1/4" = 1'-0"

**504 Concord Avenue, Belmont, Massachusetts**
Application for Certificate of Appropriateness
Historic District Commission

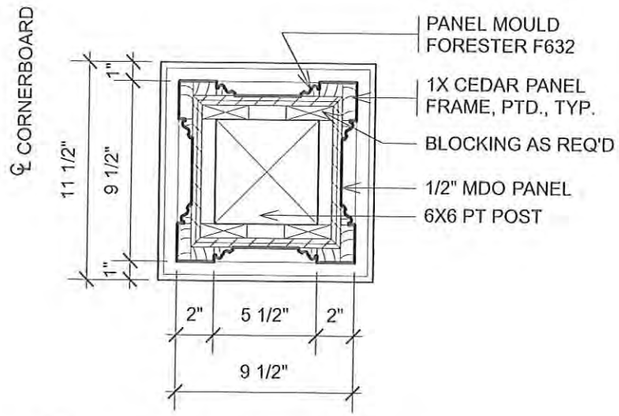


1 / A8.2 NEWEL SECTION- 6X6 POST
SCALE: 1 1/2" = 1'-0"

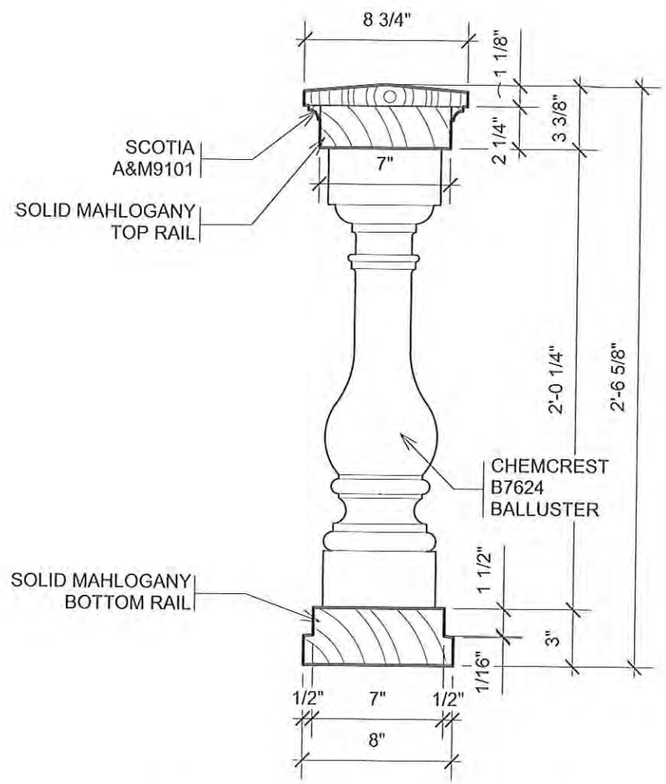


4 / A8.2 BALLUSTER AND HANDRAIL
SCALE: 1 1/2" = 1'-0"

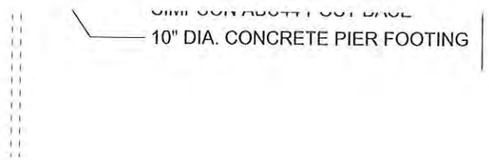


5 / A8.2 PORCH SECTION
SCALE: 1 1/2" = 1'-0"

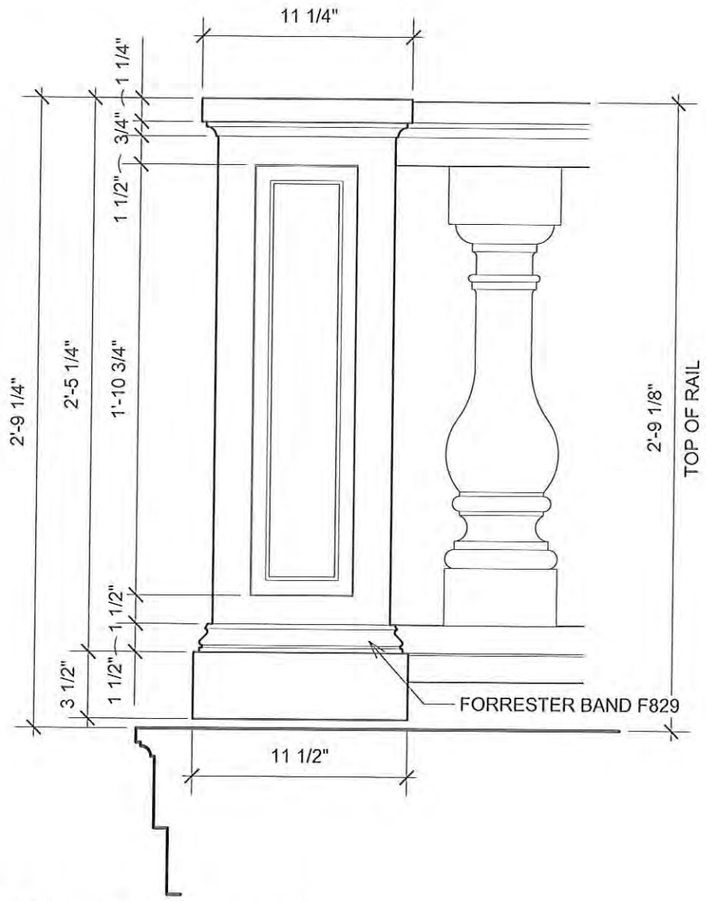


8 / A8.2 NEWEL ELEVATION
SCALE: 1 1/2" = 1'-0"

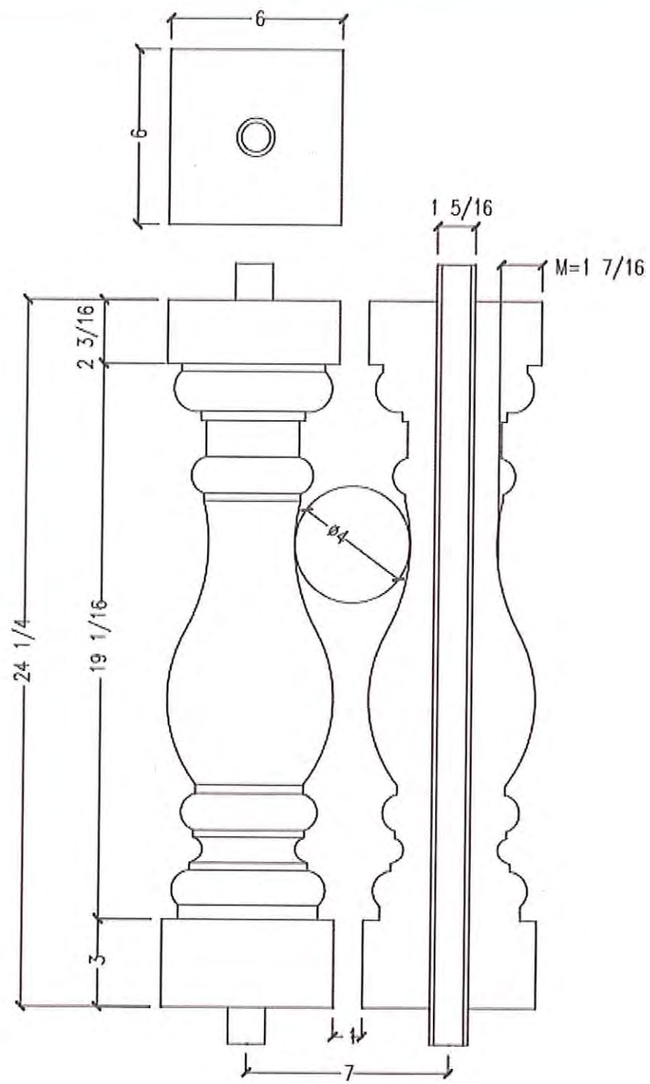


Chemcrest Architectural Products

| | | | | |
|---|---|---|---|---|
| Revised ----- | Date APR/10/06 | Width 6" | Height 24-1/4" | Hole Size 1-5/16" |
| Repeat ----- | Texture SMOOTH | Plot scale 1/4"=1" | PART: BALUSTER<br>PART NO.: B7624 Note product may vary ±1/8" | |

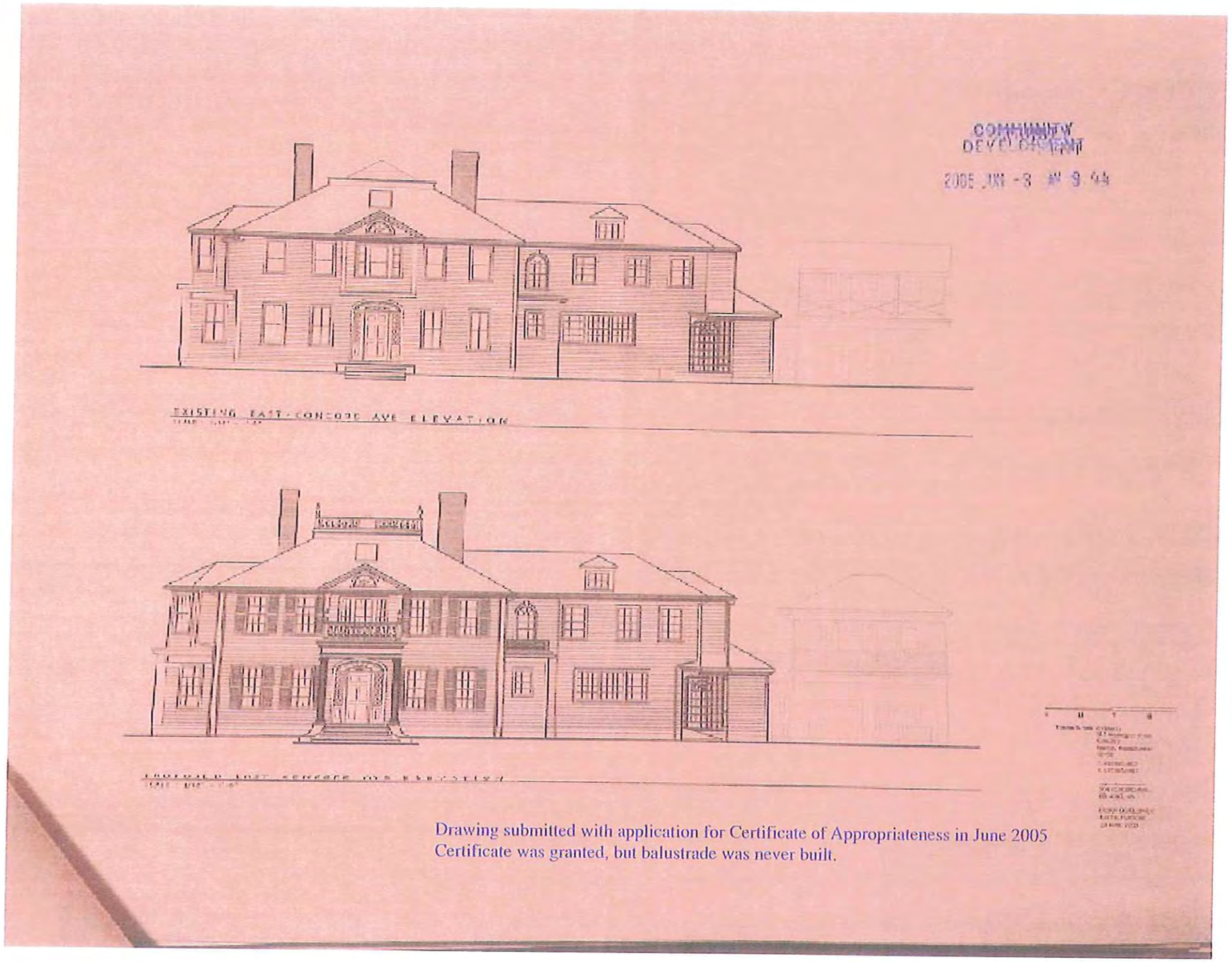


Drawing submitted with application for Certificate of Appropriateness in June 2005
Certificate was granted, but balustrade was never built.

**OFFICE OF COMMUNITY DEVELOPMENT**
**TOWN OF BELMONT**
19 Moore Street
Homer Municipal Building
Belmont, Massachusetts 02478-0900

## BELMONT HISTORIC DISTRICT COMMISSION

**CASE NUMBER:** HDC-20-02
**APPLICANT:** STEPHEN C. KNIGHT
**PROPERTY:** 504 CONCORD AVENUE
**PUBLIC HEARING:** Tuesday, January 14th, 2020

Dear Mr. Knight,

This letter is to inform you that the Historic District Commission (HDC) voted unanimously to grant a second one-year extension on the Certificate of Appropriateness (HDC Case 16-12) originally granted on January 10, 2017, and subsequently extended on February 13, 2018, and February 28, 2019. Additionally, the HDC voted to grant a one-year extension on the Certificate of Appropriateness (HDC Case 19-02) originally granted in on February 28th, 2019.

**Please note that this extension is only for the approved scope of work outlined and conditioned on the original Certificates. Any revisions to the scope will require additional review and approval by the HDC.**

If work has not commenced by **January 14, 2021**, you will need to file for an additional one-year extension prior to expiration. Note both cases (HDC Case 16-12 and HDC Case 19-02) have been combined into one case, HDC Case 20-02.

A copy of the original Certificates of Appropriateness is attached with this letter, both of which are also held on file with the Office of Community Development.

On behalf of the Historic District Commission,

Jeffrey Wheeler, Senior Planner
Office of Community Development
01.29.2020

COMMUNITY DEVELOPMENT
2017 JAN -5 PM 6:04

# BELMONT HISTORIC DISTRICT

Historic District Commission
Town Hall
Belmont, Mass. 02478

## APPLICATION FOR CERTIFICATE OF APPROPRIATENESS

Application is hereby made for the issuance of a Certificate of Appropriateness under the provisions of the General Laws, Chapter 40C amended and the Belmont By-laws, Article 15, a copy of which is in the office of the Town Clerk.

SEE INSTRUCTIONS ATTACHED – TYPE OR PRINT

FOR OFFICE USE ONLY

Application No. _____
Received _____ By _____
Hearing Date 12/13/16, continued to 1/10/17
Application Returned _____
Approved 1/10/17 as per amendment + conditions stated below. Lauren Bruce

1. ADDRESS 504 CONCORD AVENUE PRECINCT 3
2. NAME OF BUSINESS OR PROPERTY KNIGHT RESIDENCE

3. APPLICANT GREGORY LOMBARDI DESIGN, INC. Phone 617.492.2808
Address 2235 MASSACHUSETTS AVE, CAMBRIDGE, MA Zip Code 02140
4. PROPERTY OWNER* STEPHEN AND LISA KNIGHT Phone 617.231.2401
Address 504 CONCORD AVE, BELMONT, MA Zip Code 02478
5. ARCHITECT (if applicable) HART ASSOCIATES ARCHITECTS Phone 617.489.0030
Address 50 CHURCH ST, BELMONT, MA Zip Code 02478
6. CONTRACTOR (if applicable) R.P. MARZILLI AND CO. Phone 508.533.8700
Address 21 TROTTER DR, MEDWAY, MA Zip Code 02053

7. BRIEF DESCRIPTION OF ALL PROPOSED WORK. (This description provides the basis for the Commission's decision; it must clearly represent the entirety of the project. Use additional pages as necessary.)

LANDSCAPE SITE IMPROVEMENTS, INCLUDING RECONSTRUCTION OF STAIRS TO FRONT ENTRANCE OF RESIDENCE AND SUBTERRANEAN GARAGE/GROTTO. The certificate is amended as follows: New subterranean garage with brick and stone facade, painted wood doors, stone balustrade; landscaped stone walls, stone and gravel pavers, all as shown on attached drawings submitted January 10, 2017 by Gregory Lombardi Landscape Design and Hart Associates, architects. Additional product materials related to wood garage doors and exterior lighting should be submitted prior to construction.

8. Does the proposed work require other permits or approvals (other than a building permit)? If yes, indicate: To be confirmed by Office of Community Development.

N/A

9. DOCUMENTATION ATTACHED (see instructions):

- A. ☑ Photographs
- B. ☑ Site Plan
- C. ☐ Floor Plans
- D. ☐ Roof Plan
- E. ☑ Elevations & Sections
- F. ☑ Detail Drawings
- G. ☐ Manufacturer's product literature/specifications
- H. ☐ Zoning compliance/non-compliance
- I. ☐ Model
- J. ☐ Other _____

10. SIGNATURES – Both are required

Applicant _____ Date 11.16.16
Owner* _____ Date 11.16
*If property is a condominium, the Chairperson must sign.

SCALE DRAWINGS AND PHOTOGRAPHS OF EXISTING CONDITIONS AND ALL PROPOSED WORK MUST BE SUPPLIED BY THE APPLICANT. INSUFFICIENT DOCUMENTATION AND INCOMPLETE APPLICATIONS WILL BE RETURNED.

# Town of Belmont
# Historic District Commission

# CERTIFICATE OF

_X_ Appropriateness ___Non-Applicability ___Hardship

**Case No.** HDC-19-02 **Approval Date:** February 28, 2019

**Address:** 504 Concord Avenue **Belmont, MA**

**Work Approved:**

1.) Construct balustrade along all four sides at top of roof ridge line on main house, consistent with project approval received in 2005.

2.) Turned balusters, railing, posts and finials to match existing balcony railing over main entry door.

3.) Materials as specified in application: mahogany top and bottom rail; ballusters to be Chemcrest B7624; newell post to be cedar and MDO panel as shown in architect's drawings.

**Conditions:** White paint color to match existing railings.

**Attachments:** HDC application, drawings #1-15 prepared by Hart Associates, Architects

**Date:** **March 10, 2019** **HDC Signature:** Lauren G. Meier

**HDC Representative**
Lauren G. Meier, Co-chair

For more information:
Office of Community Development
Homer Municipal Building, 2nd Floor
19 Moore Street
Belmont, MA 02478
617-993-2666

NOTES:
OCD will send the Applicant a copy of this Certificate after it is signed. Please keep a copy for your records. Submit a copy of the signed Certificate and all attachments with your Building Permit Application.

Confirm that no additional permits or approvals are required before commencing work.

**OFFICE OF COMMUNITY DEVELOPMENT**
**TOWN OF BELMONT**
19 Moore Street
Homer Municipal Building
Belmont, Massachusetts 02478-0900

## BELMONT HISTORIC DISTRICT COMMISSION

**CASE NUMBER: HDC Case 21-03, Case 21-04**
**APPLICANT:** STEPHEN C. KNIGHT
**PROPERTY:** 504 CONCORD AVENUE
**PUBLIC HEARING:** February 9, 2021

Dear Mr.Knight,

This letter is to inform you that the Historic District Commission (HDC) voted unanimously to grant a third one-year extension on the Certificate of Appropriateness (HDC Case 20-02) originally granted on January 10, 2017, and subsequently extended on February 13, 2018, February 28, 2019, and January 14, 2020. Additionally, they HDC voted to grant a second one-year extension on the Certificate of Appropriateness originally granted on February 28, 2019 (HDC Case 19-08) and subsequently extended on January 14, 2020.

Please note that this extension is only for the approved scope of work outlined and conditioned on the original Certificates. Any revisions to the scope will require additional review and approval by the HDC.

If work has not commenced by February 9, 2022, you will need to file for an additional one-year extension prior to expiration. Note both cases (HDC Case 16-12 and HDC case 19-02) have been combined in to one case, HDC Case 20-02).

A copy of the original Certificates of Appropriateness is attached with this letter, both of which are also held on file with the Office of Community Development.

On behalf of the Historic District Commission,

_____

Office of Community Development

# Town of Belmont
# Historic District Commission

# CERTIFICATE OF

X Appropriateness ___Non-Applicability ___Hardship

**Case No.** HDC-19-08 **Approval Date:** October 23, 2019

**Address:** 504 Concord Ave **Belmont, MA**

**Work Approved:** Architectural work including building addition as described in Application and supplemental materials. East and south facades of house are visible from public way; this certificate approves building addition shown on proposed South Elevation by Hart Associates.

1.) Construct two story family room ell off the south side of the rear elevation as shown on architectural plans. Materials noted in supplemental materials submitted by Hart Associates, October 10, 2019 (LePage windows, porch eave detail, exterior lighting, architectural columns, casing details).

2.) Install new custom wood door with vertical nickel gap planks and strap hinges to provide pedestrian entry at previously approved subterranean garage.

3.) Reroof entire house with North Country slate – unfading black

4.) Change alignment of previously approved retaining wall at southeast corner of house to provide space for additional planting beds as shown on plan "Proposed South Elevation, Revised Arrival Court Plan, Detail Showing Modification to previously Approved Plan," dated September 17, 2019.

**Conditions:** Please see entire HDC Application including architectural plans by Hart Associates dated September 17, 2019; plans by Gregory Lombardi landscape architecture, project description, and supplemental materials submitted October 10, 2019.

Note: driveway paving may be delayed to coordinate with adjacent neighbor.

**Attachments:** HDC Application dated September 17, 2019; supplemental materials dated October 10, 2019 reviewed October 23, 2019

**Date:** **October 28, 2019** **HDC Signature:** Lauren G. Meier

**HDC Representative**
Lauren G. Meier, Co-chair

For more information:
Office of Community Development
Homer Municipal Building, 2nd Floor
19 Moore Street
Belmont, MA 02478
617-993-2666

NOTES:
OCD will send the Applicant a copy of this Certificate after it is signed. Please keep a copy for your records. Submit a copy of the signed Certificate and all attachments with your Building Permit Application.

Confirm that no additional permits or approvals are required before commencing work.

Town Belmont
**Historic District Commission**
Homer Municipal Building, 2nd Floor
19 Moore Street
Belmont, MA 02478

| OFFICE USE |
| --- |
| Case Number: HDC – |
| |

## APPLICATION

In accordance with the Historic Districts Act, MGL Ch 40C, and the Town of Belmont General Bylaws, §40-315, the undersigned applies to the Belmont Historic District Commission for a Certificate of:

☒ Appropriateness ☒ Non-Applicability ☐ Hardship

**1. PRELIMINARY INFORMATION:**

Address of Property: 504 CONCORD AVE.
Property Owner's Name: STEPHEN KNIGHT + ELIZABETH KNIGHT
Address: 504 CONCORD AVENUE, BELMONT
Email: STEVECKNIGHT @ GMAIL.COM Phone: 617.231.2401

Agent Name: STEPHEN HART / HART ASSOCIATES ARCHITECTS, INC.
Address: 50 CHURCH ST. BELMONT, MA
Email: STEVE@HARTARCH.COM Phone: 617.489.0030

I am the : ___ Property Owner ✓ Agent

__ Property is Owned by a Corporation, LLC, or Trust (Submit authorization to sign as owner)
__ Property is a Condominium or Cooperative Association (submit authorization to sign as trustee)

*If applicable*: Architect: HART ASSOC. ARCHITECTS Contractor: _____

**2. BRIEF DESCRIPTION OF PROPOSED WORK:**

PLS. SEE ATTACHED

**3. SIGNATURES:**

**As Owner, I make the following representations:**

A. I hereby certify that I am the Owner of the Property at: 504 CONCORD AVE.
B. I hereby certify that if an Agent is listed on this Application, this Agent has been authorized to represent this Application before the Belmont Historic District Commission.

Owner: Elizabeth G. Knight Date: September 16, 2019

**As Applicant/Agent, I make the following representations:**

1. The information supplied on and in this Application is accurate to the best of my knowledge;
2. I will make no changes to the approved plans without prior approval from the Belmont Historic District Commission.

Applicant/Agent: Stephen E Hart Date: 9.17.19
PRES. HART ASSOCIATES ARCHITECTS, INC.

* Incomplete applications and Insufficient documentation will not be accepted. *

Approved March 23, 2017

ARCHITECTS

Hart Associates, Inc.

*Phone* 617-489 -0030
*Fax* 617 –489-0091
www.hartarch.com

50 Church Street
Belmont, Massachusetts
02478-1301

Town of Belmont
Historic District Commission
APPLICATION

September 17, 2019

The Knight Residence
504 Concord Road
Belmont, MA

2. Brief Description of Proposed Work:

The proposed additions to 504 Concord Avenue include a two story family room ell off the south side of the rear elevation, a one story conservatory between the new family room and the kitchen wing, and a one story extension north of the kitchen wing that contains a laundry and mudroom. Both proposed one story spaces have balconies on the roof level which connect to the backyard. The proposed work also includes a slate roof on the entire existing structure, new additional basement space and the addition of a pedestrian entrance to the previously approved underground garage.

In addition to these proposed building changes, there are adjustments to the previously approved landscape plans. These adjustments include slightly modifying the layout of the retaining walls in order to create more room for plant beds in front of the walls as well as adjustments to the rear walls, terraces, and plant beds that are outside of the public view-shed.

**In January of 2017 Mr. Knight submitted plans showing modifications and expansions to the existing elements that comprise the south elevation. The Historic District Commission determined the proposal to be inappropriate and denied the application. The Commissioners further recommended that he locate any proposed changes or additions to the rear of the house where they would be hidden from public view. Mr. Knight and the design team have spent considerable effort reconfiguring program elements to achieve that goal. We believe that the location of the proposed new volumes, the slope of the site, the distance to the street, and the density of trees and shrubs along the front yard mean that virtually none of the currently proposed work is visible to the public.**

……

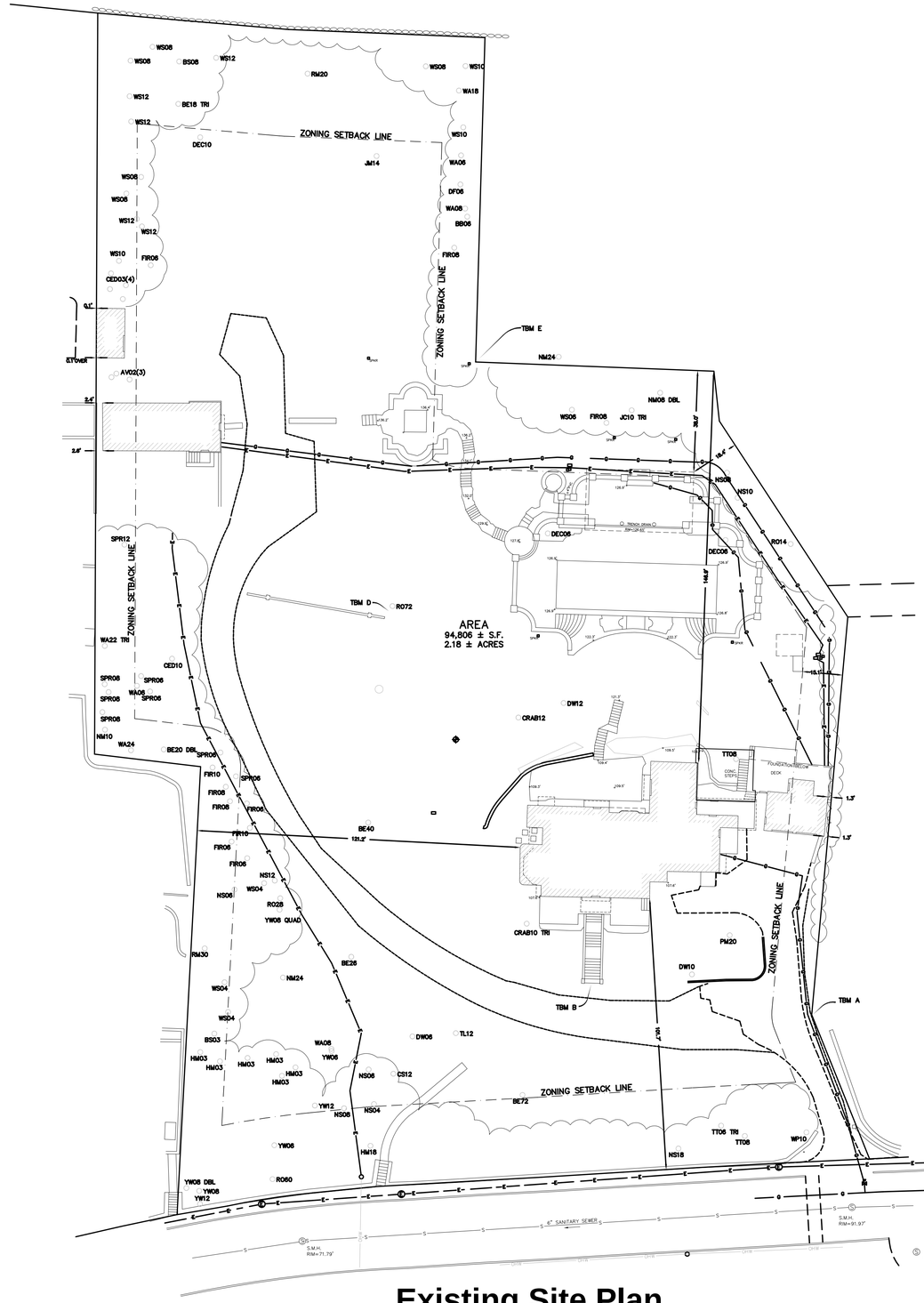


# Existing Site Plan

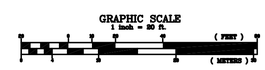


17 September 2019

Hart Associates Architects, Inc.

Existing Site Plan
504 Concord Avenue Belmont, MA 1.

#1 LOOKING NORTH-WEST

#2 LOOKING WEST

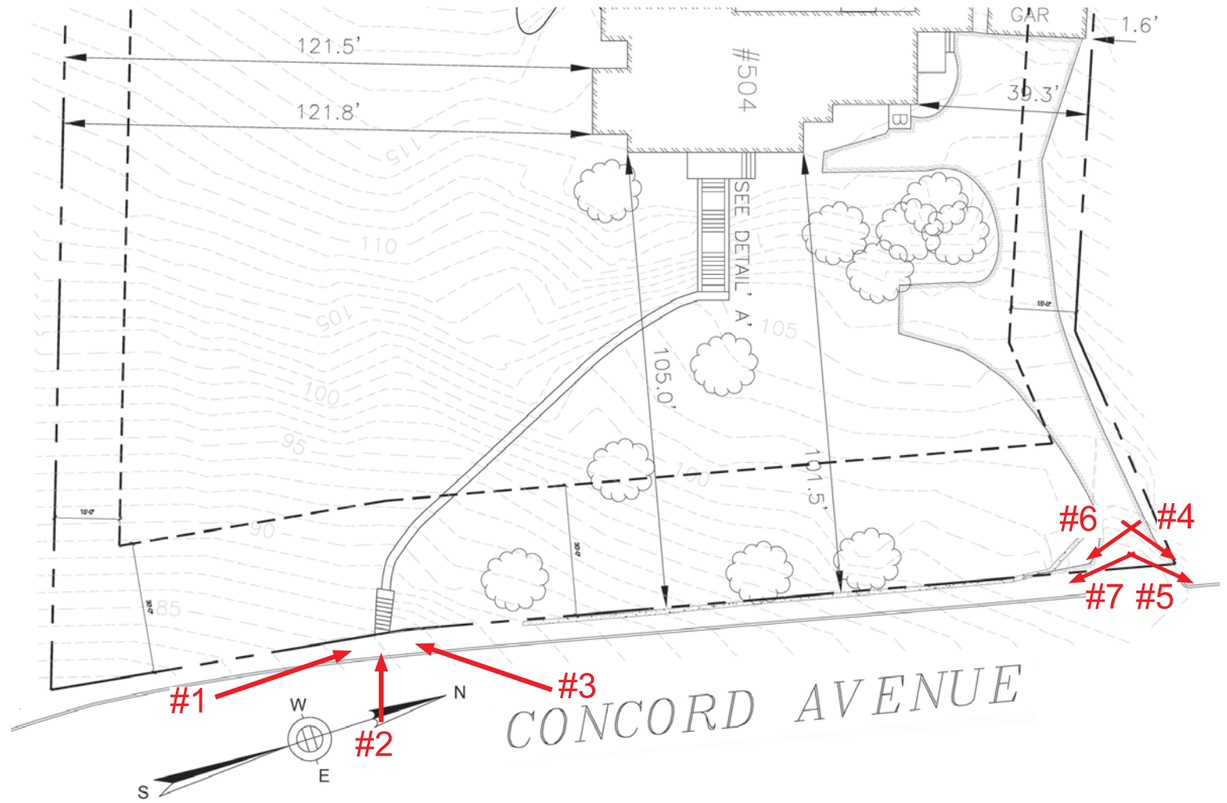

#7 LOOKING SOUTH-EAST

#3 LOOKING SOUTH-WEST

#4 LOOKING NORTH-EAST

#5 LOOKING NORTH-EAST

#6 LOOKING SOUTH-EAST

10 January 2017

GREGORY LOMBARDI DESIGN
Landscape Architecture

Existing Conditions
504 Concord Avenue | Belmont, MA

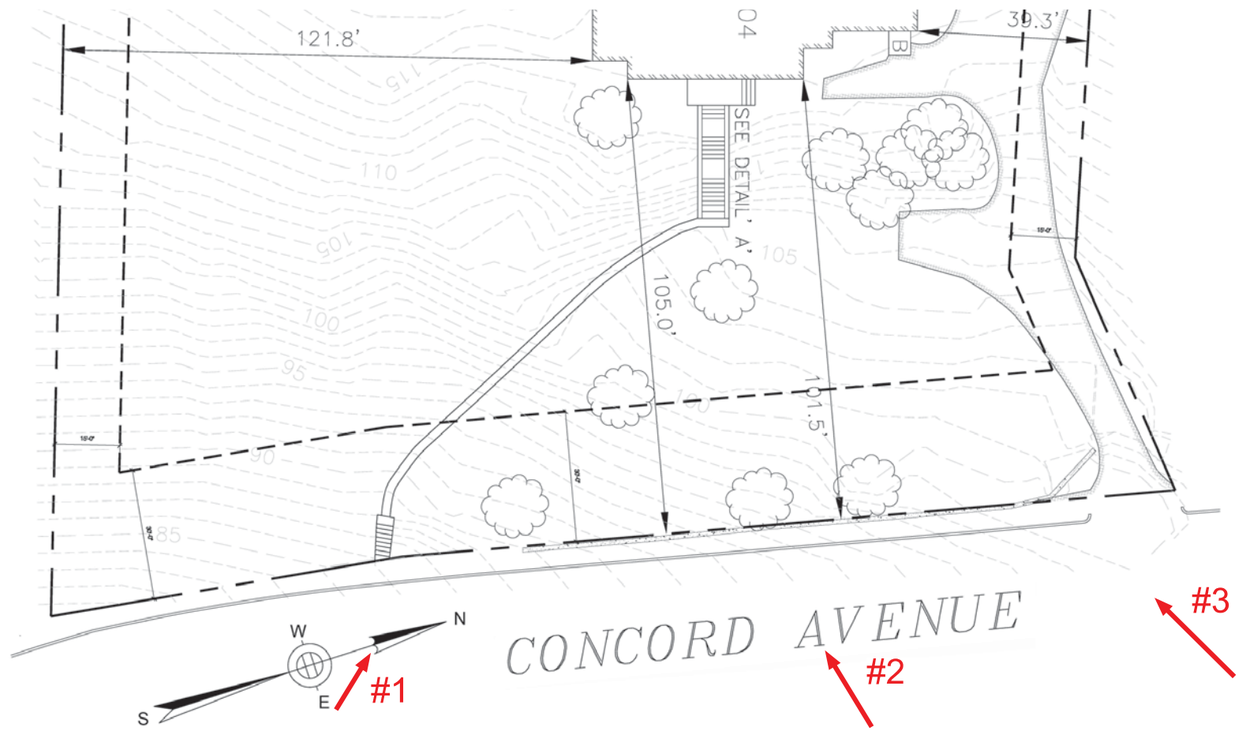


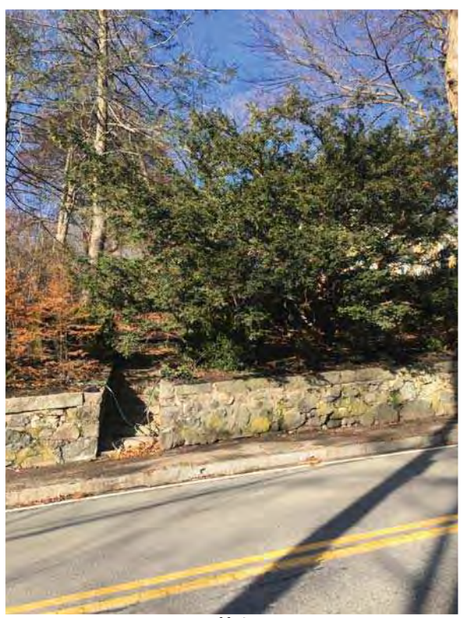

#1

#2

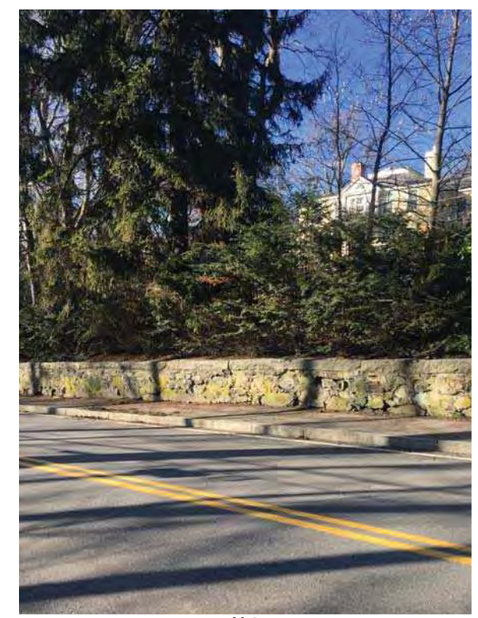

#3

10 January 2017

GREGORY LOMBARDI DESIGN
Landscape Architecture

Existing Conditions
504 Concord Avenue | Belmont, MA

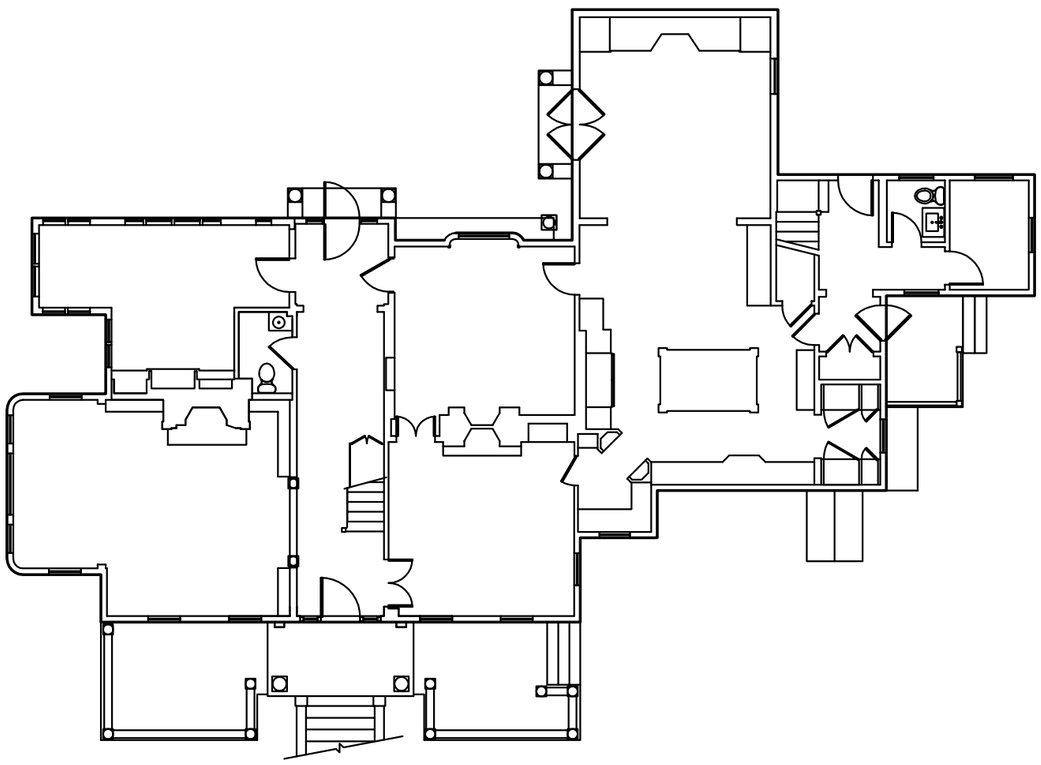

Existing First Floor Plan

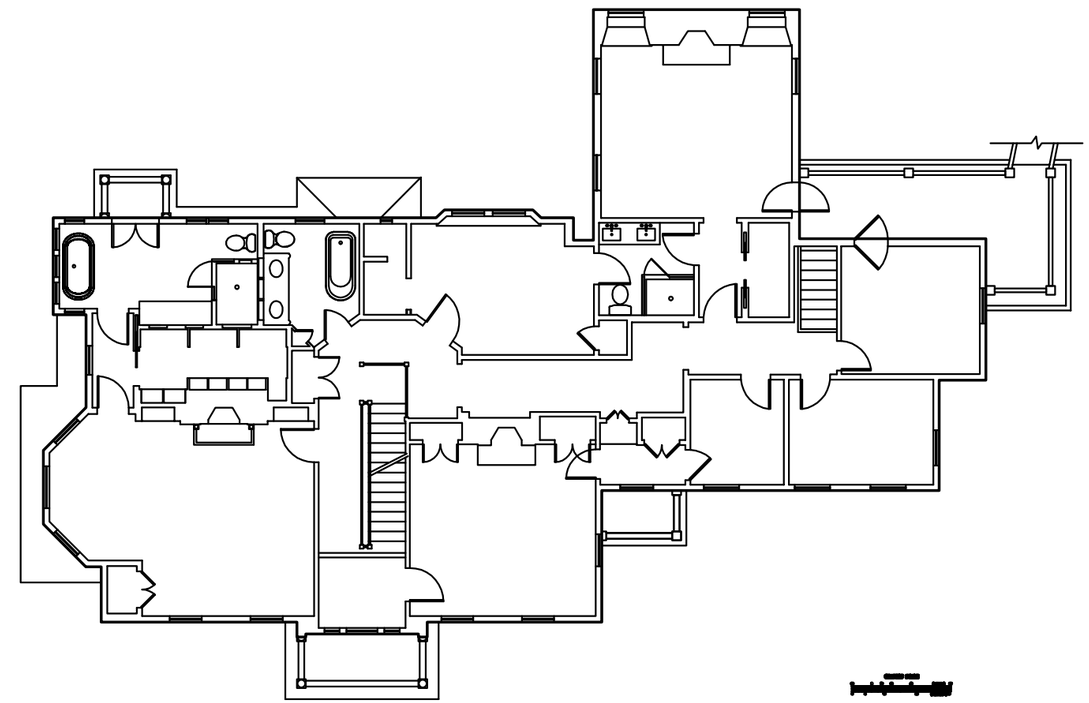

Existing Second Floor Plan

17 September 2019

Hart Associates Architects, Inc.

Existing Floor Plans

504 Concord Avenue Belmont, MA

Existing East Elevation

Existing South Elevation

17 September 2019

Hart Associates Architects, Inc.

Existing Elevations

504 Concord Avenue Belmont, MA

east elevation

south east elevation

south elevation

aerial view

17 September 2019

Hart Associates Architects, Inc.

Existing Conditions

504 Concord Avenue Belmont, MA

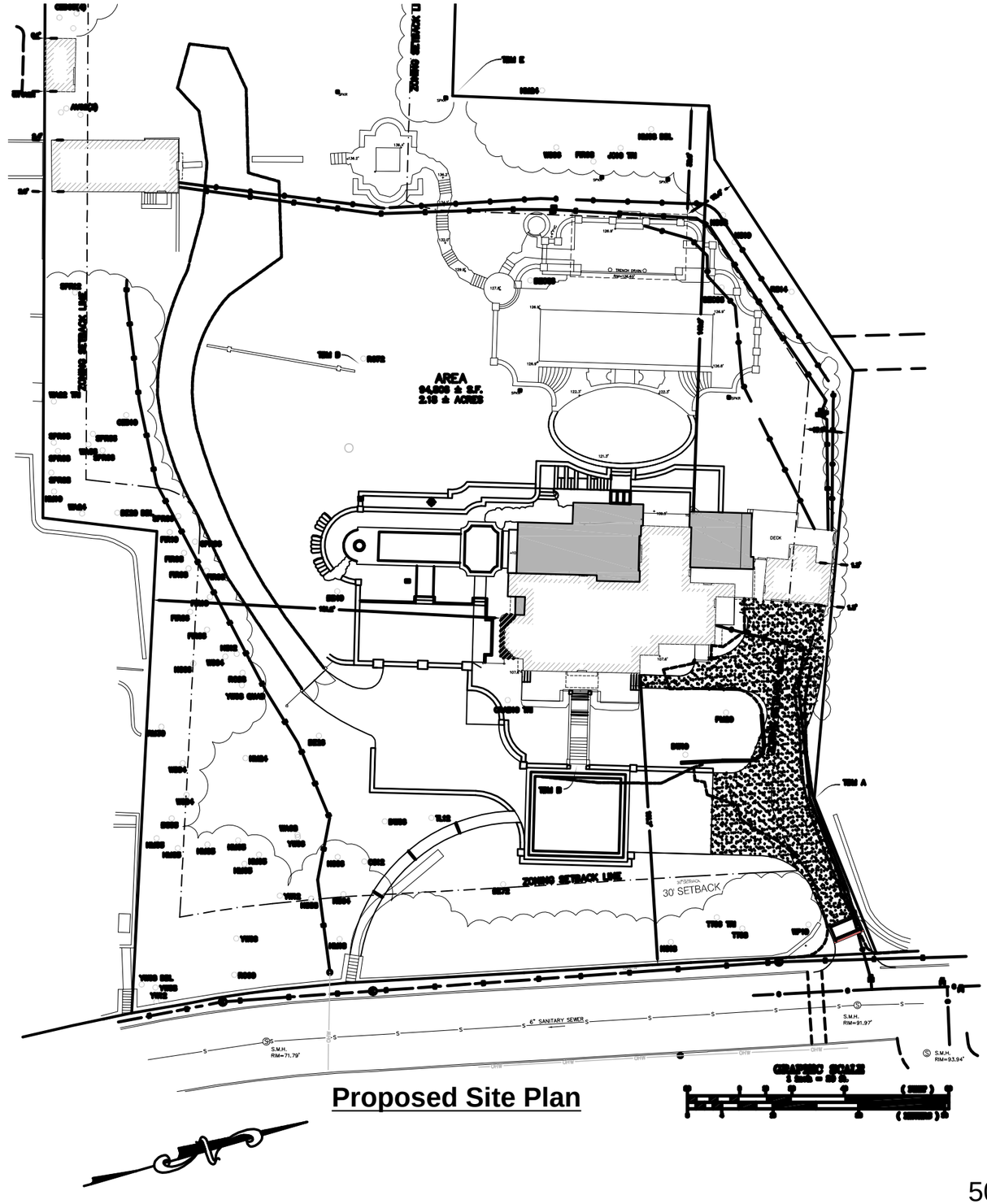


**Proposed Site Plan**

17 September 2019

Proposed Site Plan

504 Concord Avenue Belmont, MA

Hart Associates Architects, Inc.

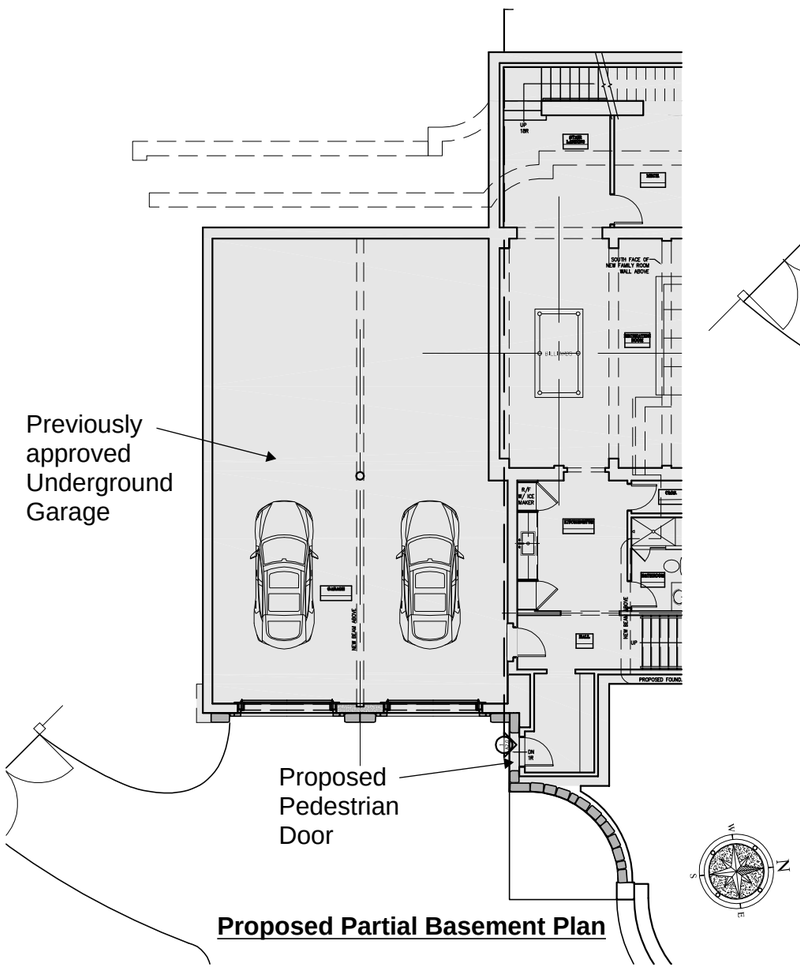


**Proposed Partial Basement Plan**

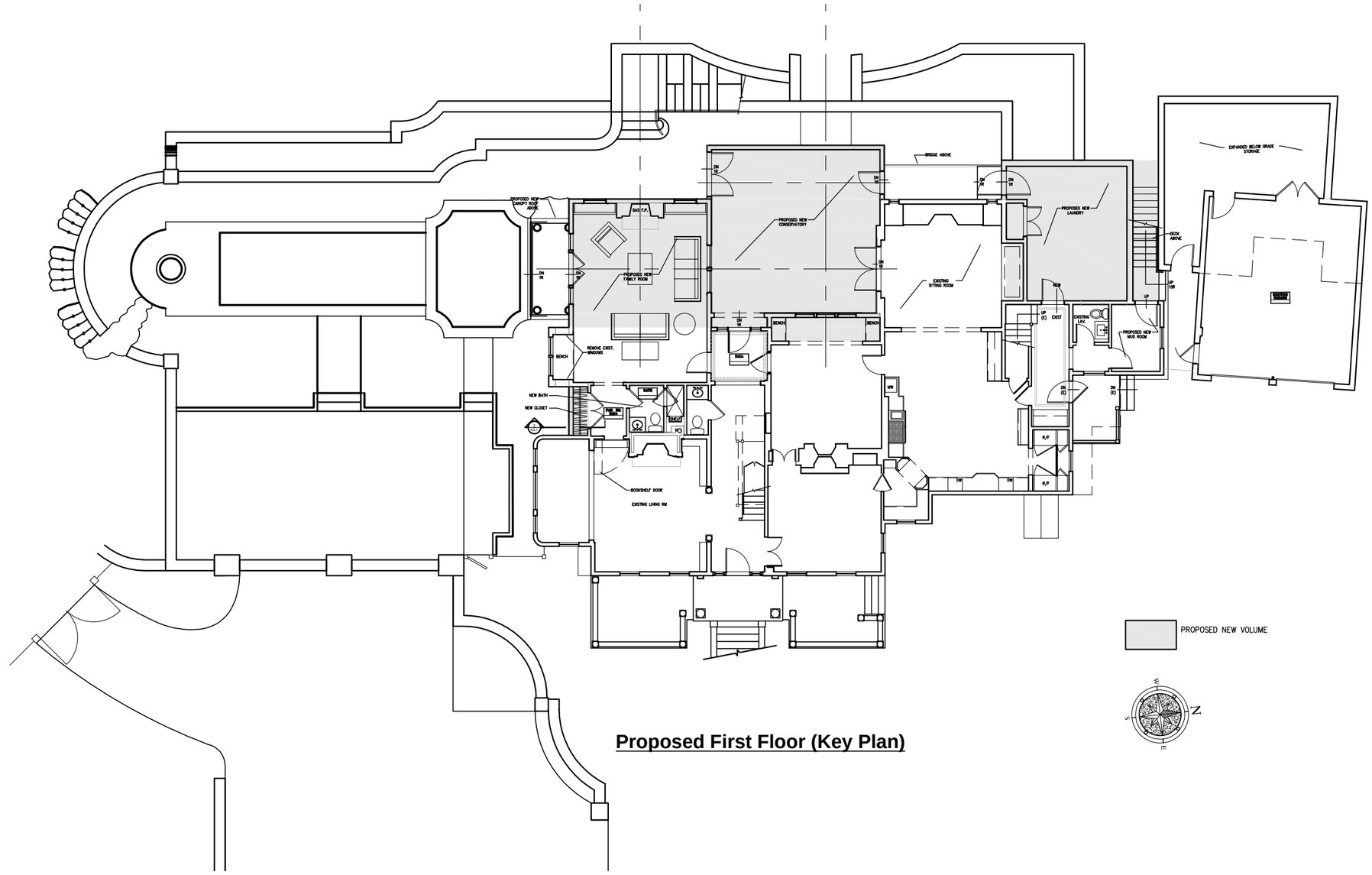


**Proposed First Floor (Key Plan)**

17 September 2019

Basement and First Floor Plan

Hart Associates Architects, Inc.

504 Concord Avenue Belmont, MA

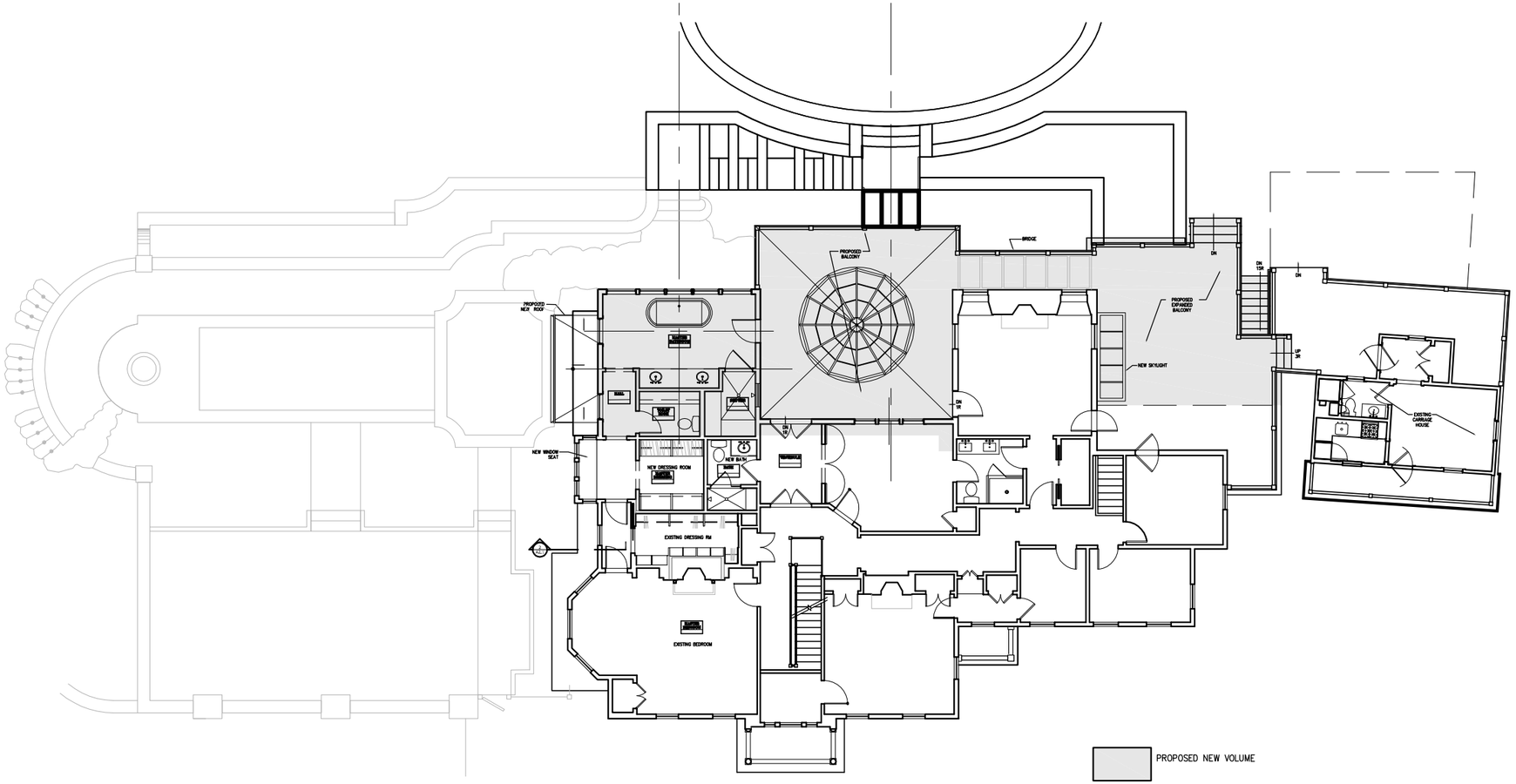


**Proposed Second Floor (Key Plan)**

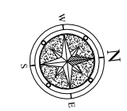


17 September 2019

Hart Associates Architects, Inc.

Proposed Second Floor Plan

504 Concord Avenue Belmont, MA

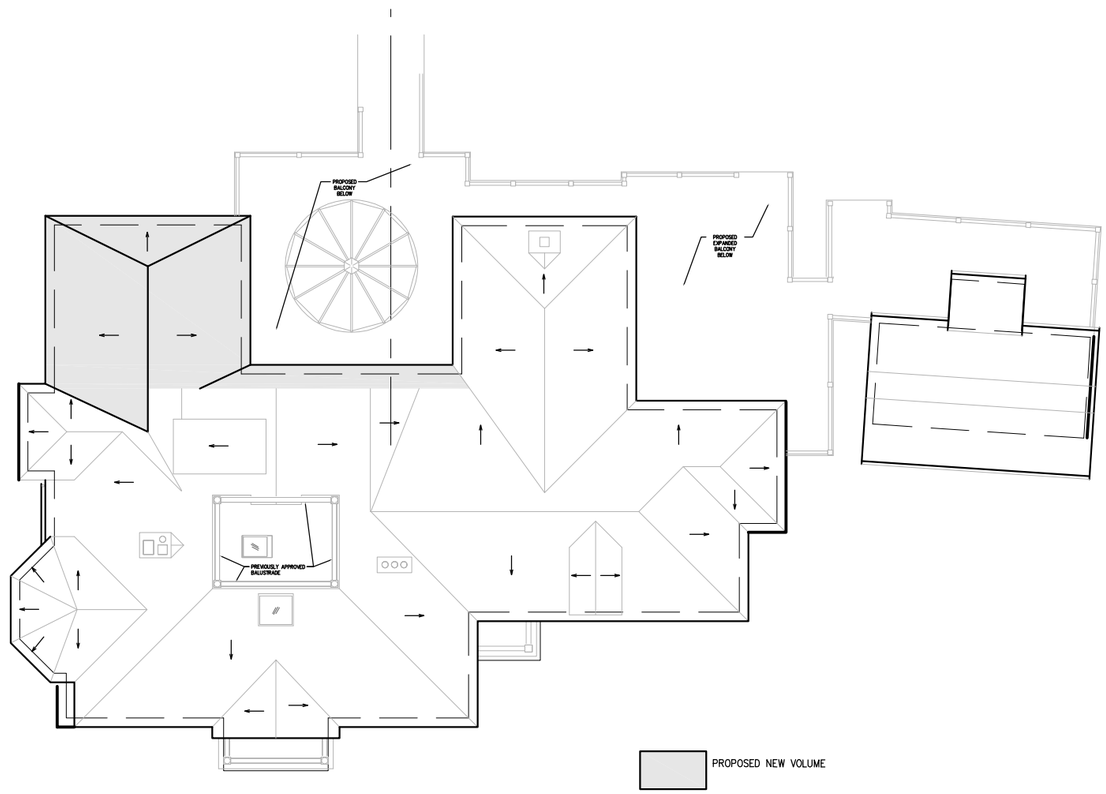


**Proposed Roof Plan**

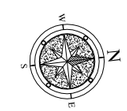


17 September 2019

Proposed Roof Plan

Hart Associates Architects, Inc.

504 Concord Avenue Belmont, MA

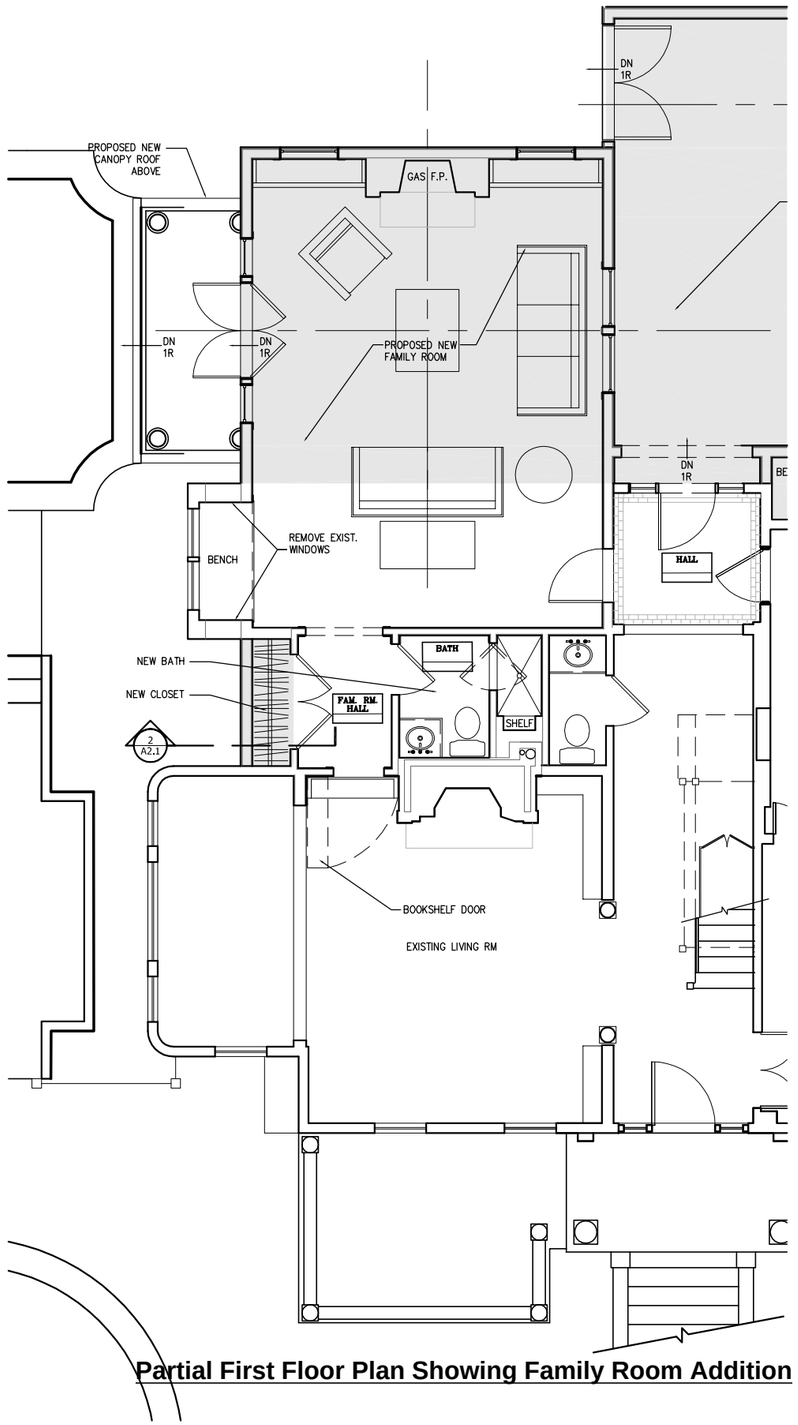


**Partial First Floor Plan Showing Family Room Addition**

Shaded areas indicate proposed addition

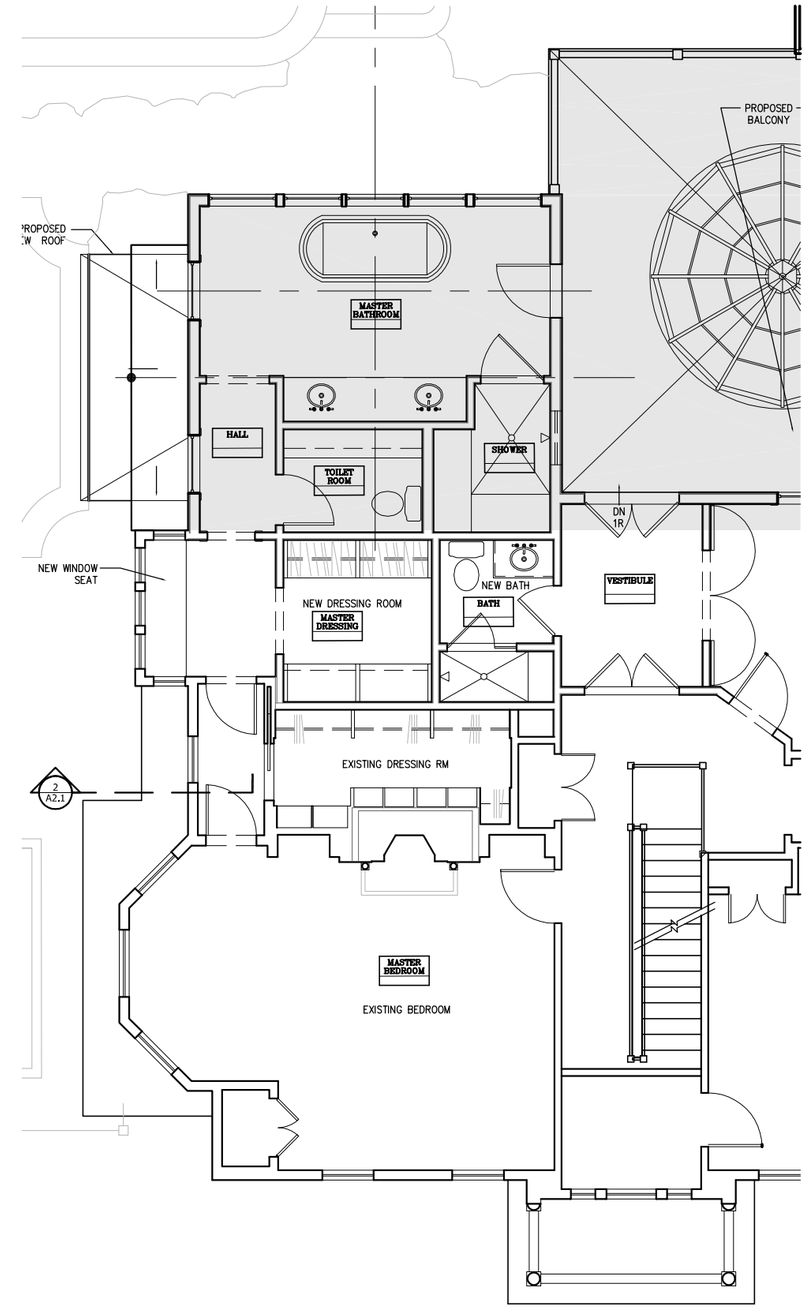


**Partial Second Floor Plan Showing Master Suite Addition**

17 September 2019

Proposed First and Second Floor Plans

504 Concord Avenue Belmont, MA

Hart Associates Architects, Inc.

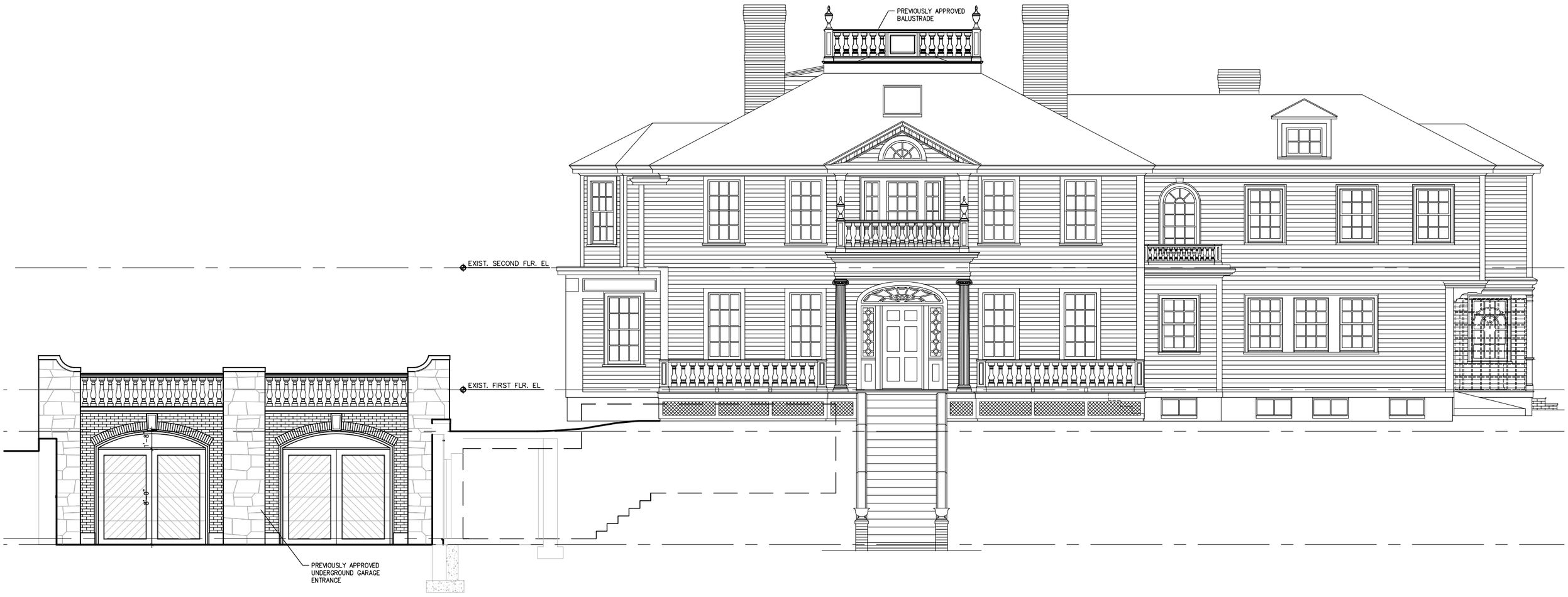


**East Elevation - (Shown for reference only)**

17 September 2019

East Elevation

Hart Associates Architects, Inc.

504 Concord Avenue Belmont, MA

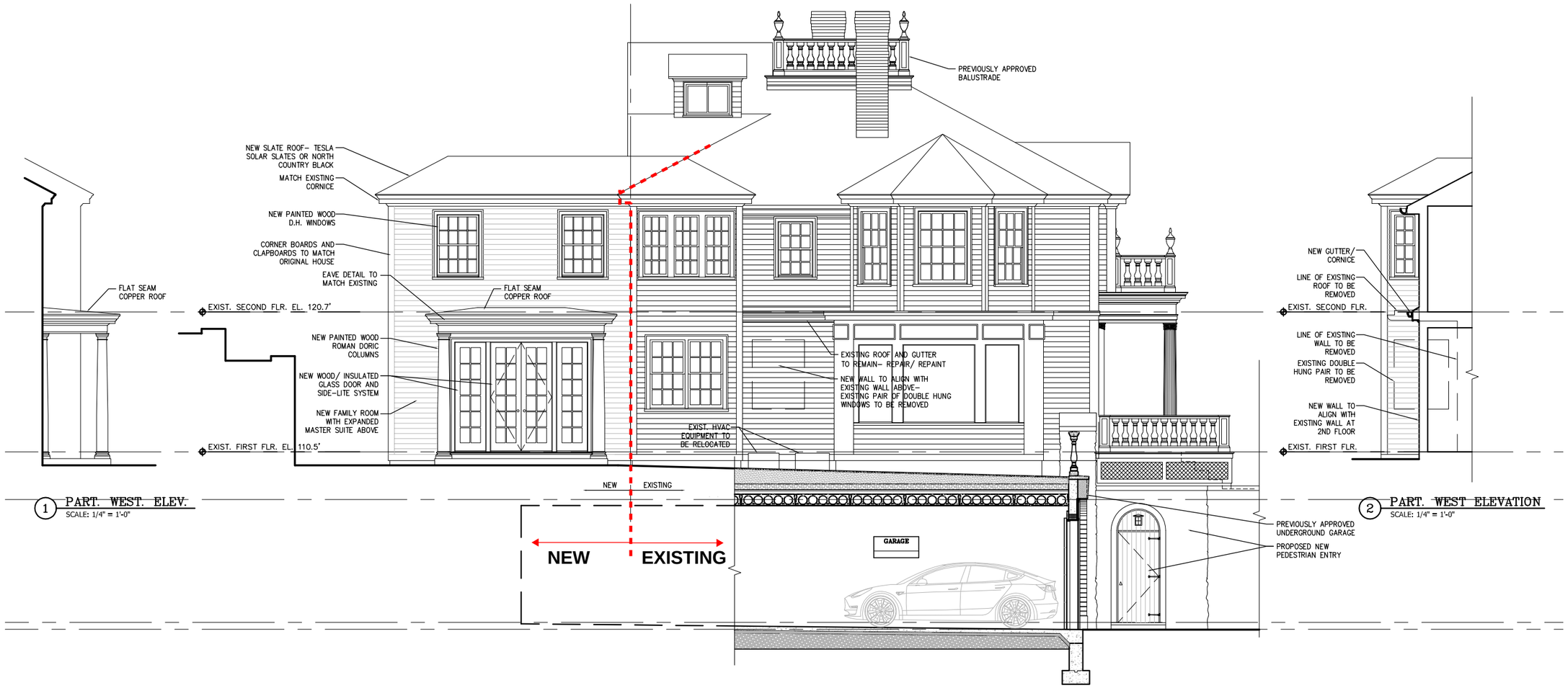


**Proposed South Elevation**

17 September 2019

Proposed South Elevation

Hart Associates, Inc.

504 Concord Avenue Belmont, MA

# Proposed addition shown shaded

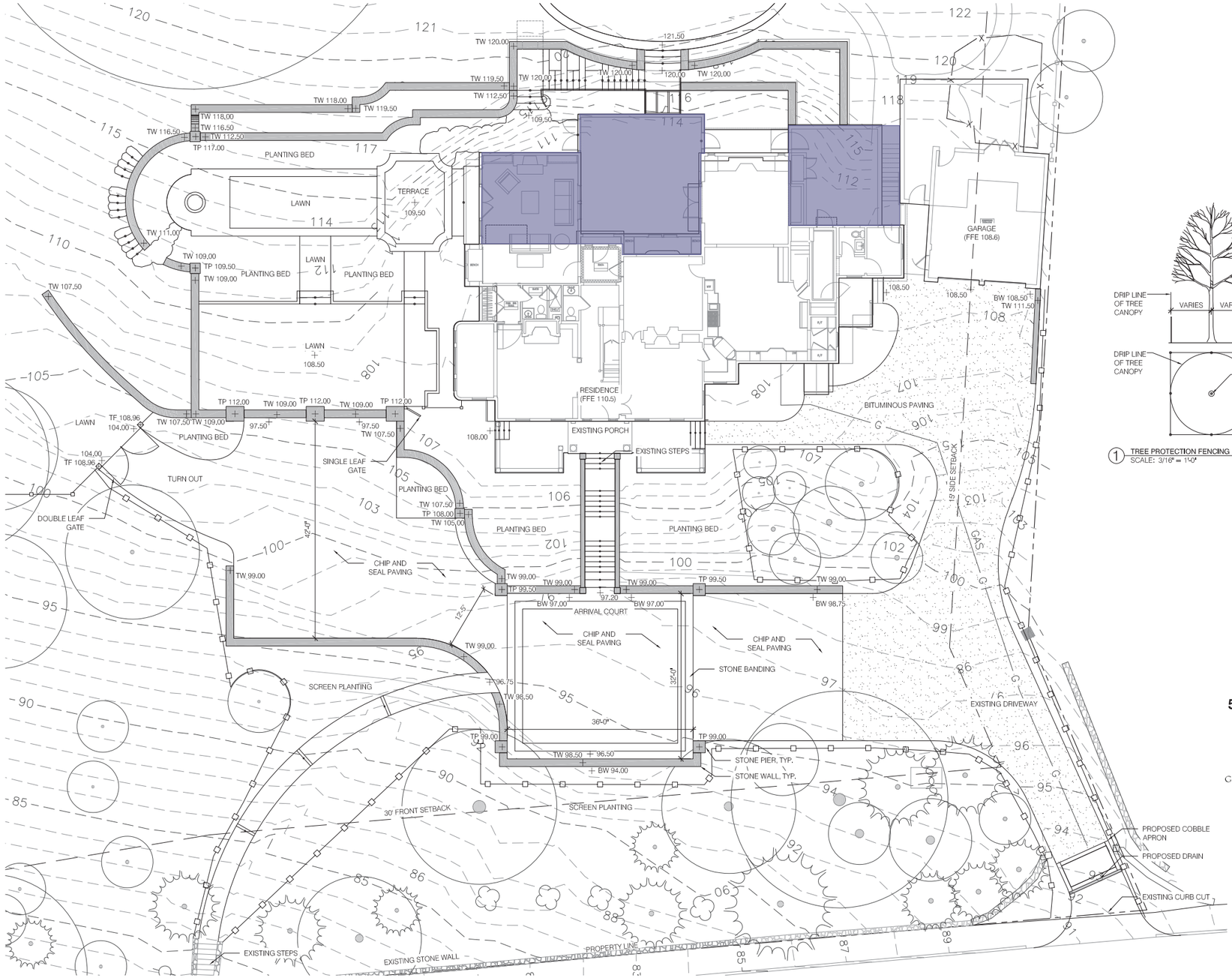


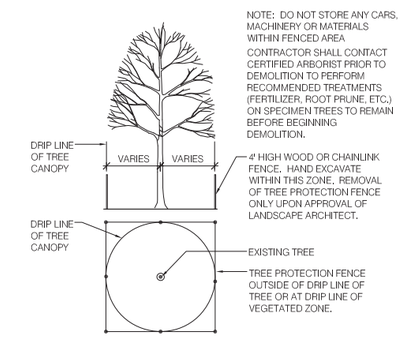


1 TREE PROTECTION FENCING
SCALE: 3/16" = 1'-0" PLAN/ELEVATION

**504 Concord Avenue**
**Belmont, MA**

**Design Development**

17 September 2019

GREGORY LOMBARDI DESIGN
Landscape Architecture
2235 Massachusetts Avenue
Cambridge, Massachusetts 02140
Phone 617.492.2808 Fax 617.492.2904

17 September 2019

GREGORY LOMBARDI DESIGN
Landscape Architecture

Revised Arrival Court Plan
504 Concord Avenue | Belmont, MA

# Proposed addition shown shaded

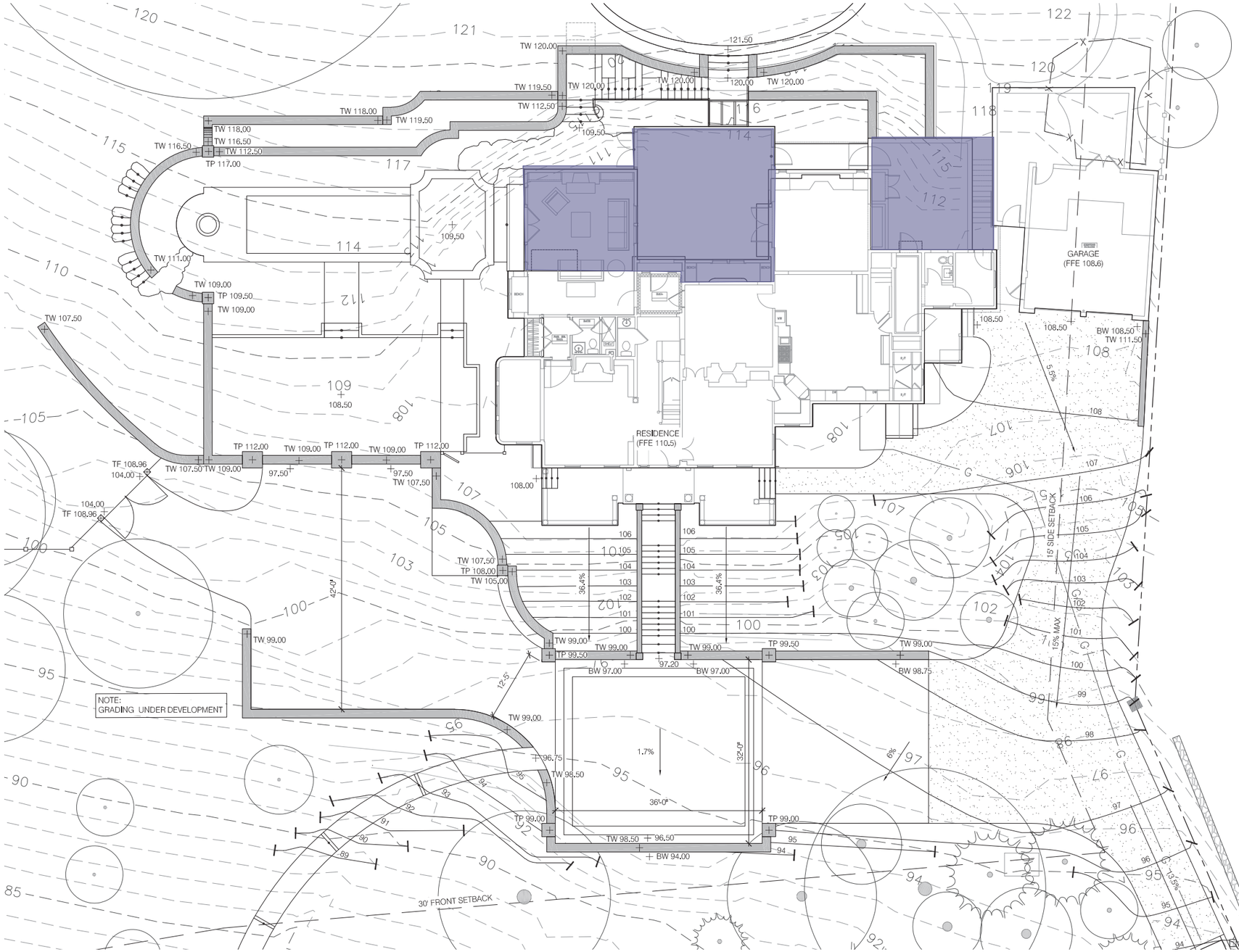


17 September 2019

GREGORY LOMBARDI DESIGN
Landscape Architecture

Revised Arrival Court - Proposed Grading Plan

504 Concord Avenue | Belmont, MA

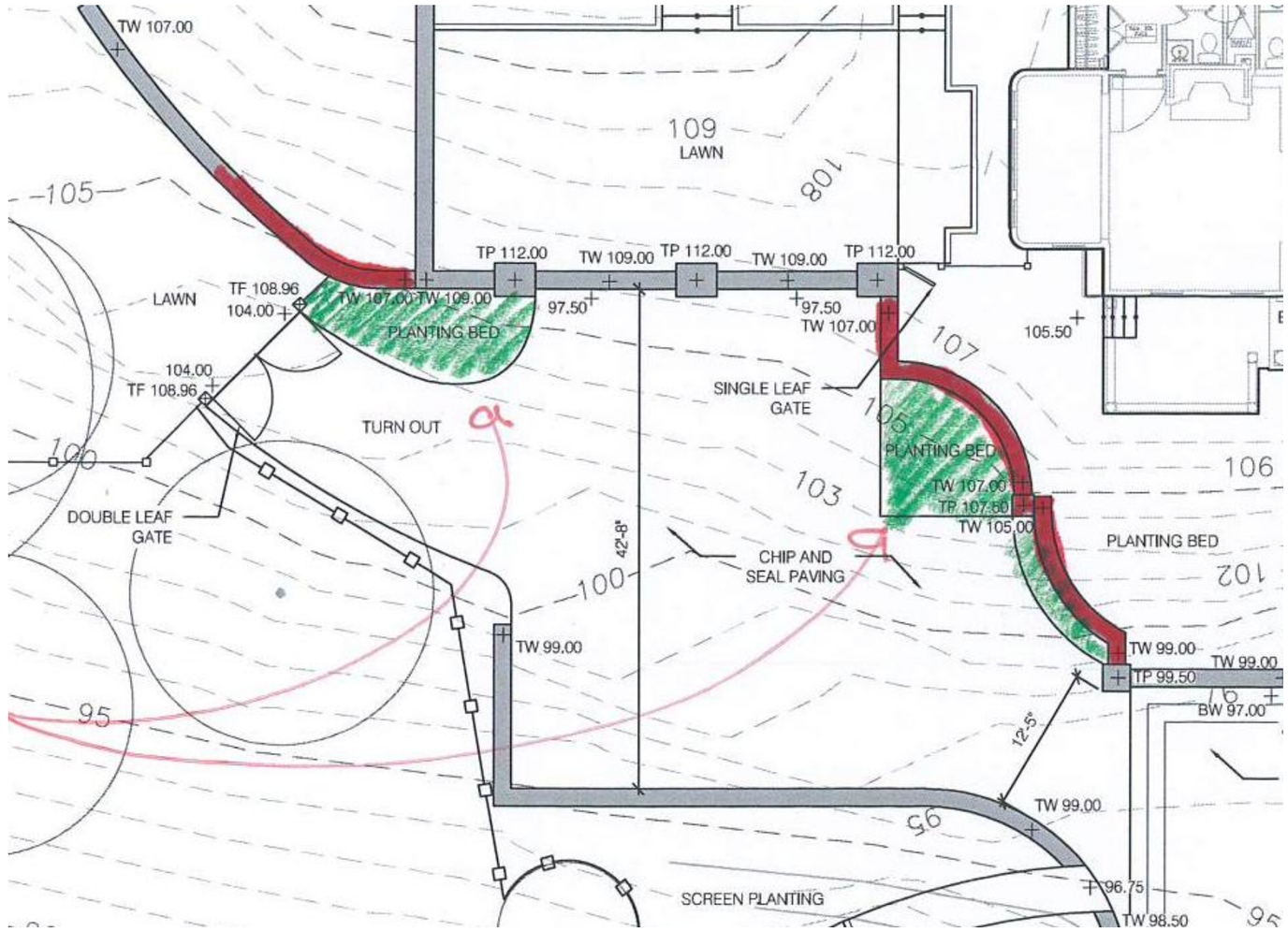


**Revised Arrival Court Plan - Detail Showing Modification to previously Approved Plan**

ARCHITECTS

Hart Associates, Inc.

*Phone* 617-489 -0030
*Fax* 617 –489-0091
www.hartarch.com

50 Church Street
Belmont, Massachusetts
02478-1301

Town of Belmont
Historic District Commission
Addendum to Application for Certificate of Appropriateness
Hearing Date October 8, 2019

The Knight Residence
504 Concord Road
Belmont, MA

October 10, 2019
The following list and accompanying exhibits describe the materials and products proposed for the south elevation of the family room addition as also described and labeled on the attached Proposed South Elevation drawing dated 10 October 2019,

Proposed Materials and Products

1. **Roofing.** North Country Slate- Unfading Black. 8" width, 6 ½" exposure. See **Exhibit A**
   (If Tesla Solar Slates become available in time to be installed on this project, we will apply for HDC review)
2. **Eave detail.** Match existing eave detail, painted wood. See **Exhibit B**
3. **Windows**. Install two new double hung windows. LePage XL series painted grandis, 1 ¾" thick sash, clear low e insulating glass, 7/8 SDL muntins, custom casing (see below) 1 ¾"x 2 ¼"sill. See **Exhibit C**
4. **Porch eave detail**. Match existing porch eave details. Painted wood flat stock and moldings. Surface mounted bronze finish ceiling light fixture with translucent glass See **Exhibit D**
5. **Porch columns**. Turncraft Roman Doric columns and pilasters. painted cedar shafts, painted polyurethane caps and bases, painted aluminum plinths. See **Exhibit E**
6. **French Doors.** LePage 2 ¼" thick painted grandis, clear low e insulating glass, 7/8 SDL muntins, custom casing (see below) 1 ¾" clear finish mahogany casing. See **Exhibit F**
7. **Casings-**windows and door. Match existing profile. See **Exhibit G**
8. **Clapboard**. Red cedar clapboard. Size and exposure to match existing. Painted.
9. **Porch roofing**. Soldered flat seam 20 oz. red copper
10. **Infill segment** –first floor gap west of living room- painted red cedar clapboards painted wood soffit and fascia. Details and dimensions to match existing.
11. **Pedestrian door** to underground garage. Painted 3'0"x 6'8"custom wood door with vertical nickel gap planks and strap hinges. Fixed arch above with bronze finish lantern. See **Exhibit H**

……

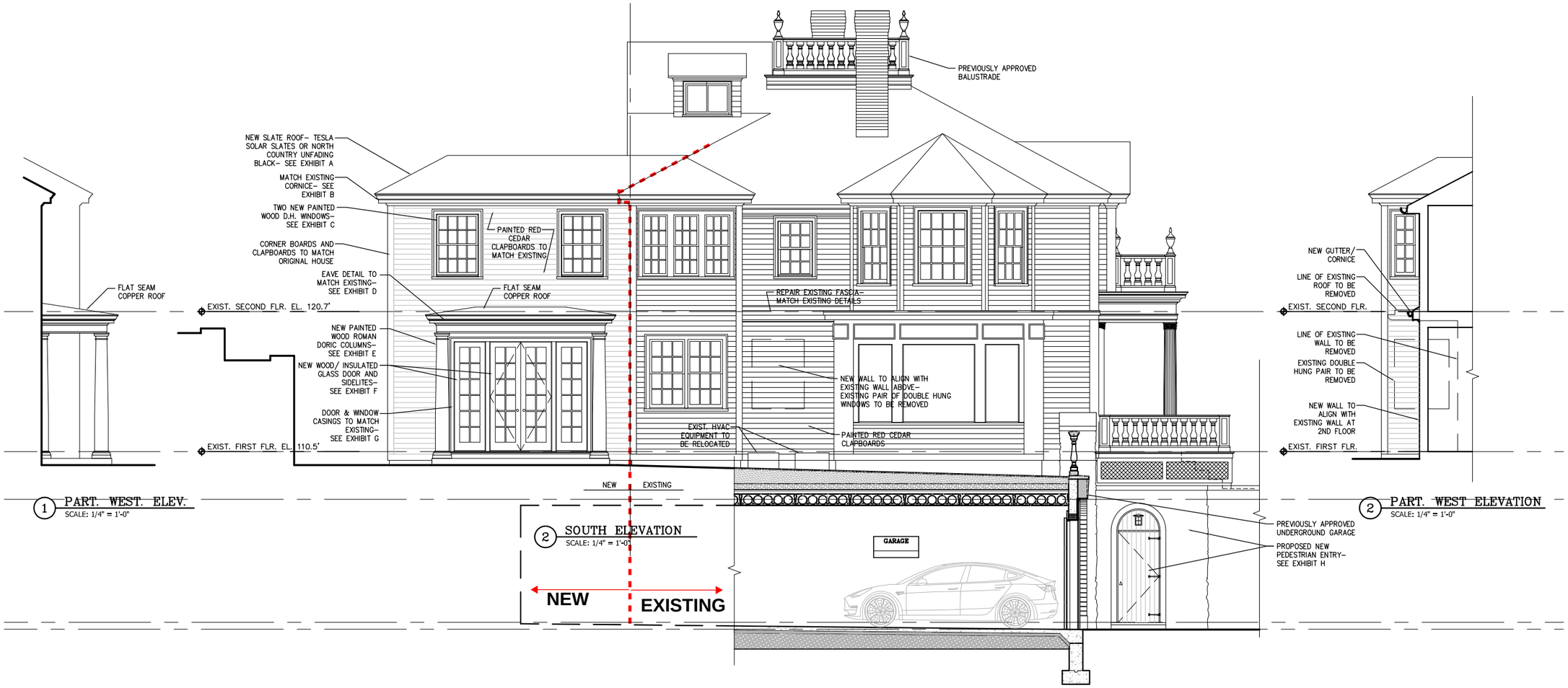


**Proposed South Elevation**

10 October 2019

Proposed South Elevation

Hart Associates, Inc.

504 Concord Avenue Belmont, MA

Exhibit **A**
504 Concord Avenue
Addendum to COA application
October 11, 2019

*The 100 Year Roof*

**North Country Slate®**

# UNFADING BLACK

North Country Unfading Black is a premium quality roofing slate offering an elegant and lasting roof for both new construction and restoration projects. Favorably compared to the famous slate of the Monson region of Maine, this smooth, rich black slate with a slight luster has earned the admiration of architects, contractors and building owners around the world. North Country Unfading Black slate meets or exceeds ASTM requirements as an S-1 rated roofing slate. This slate is produced by a single quarry in North America and is exclusive to North Country.

NRCA
Gold Circle Awards

2016 – Gold Circle Award Winner
2013 – Gold Circle Award Winner

e l e g a n c e

p e r f o r m a n c e

Exhibit **A**
504 Concord Avenue
Addendum to COA application
October 11, 2019

# NORTH COUNTRY SLATE PROPERTIES

North Country roofing slate when fixed with non-corroding nails or hooks can provide a service life in excess of 100 years.

- Maintenance free.
- Durable and long lasting.
- Resistant to chemical pollutants and acid rain.
- Unaffected by freeze/thaw cycles.
- Environmentally safe.
- Proven performance on rooftops.
- Delivered from stock.
- Special trimming on request.

* ASTM E108-10 Class A (highest) Fire Resistance Rating

** FM4473 Class 3 Hail Impact Rating

*** ASTM D3161-15 Class F (highest) Wind Resistance Rating

*As per 2015 International Building Code section 1505.2 and as tested by the National Slate Association July 13, 2010.
**As tested by the National Slate Association February 25, 2010.
***As tested by the National Slate Association December 8, 2015.

# THICKNESS AND WEIGHT

North Country Slate is available in the following nominal thicknesses:

| | | |
|---|---|---|
| Standards | 3/16″ | 700 lbs./square |
| Quarters | 1/4″ | 900 lbs./square |
| Heavies | 3/8″ | 1400 lbs./square |

# SCHEDULE OF STANDARD SIZES

| Slate size Inches | Pieces per square at 3″ headlap | Exposure at 3″ headlap |
|---|---|---|
| 24x12 | 115 | 10.5″ |
| 22x12 | 126 | 9.5″ |
| 22x11 | 137 | ″ |
| 20x12 | 141 | 8.5″ |
| 20x11 | 154 | ″ |
| 20x10 | 170 | ″ |
| 18x12 | 160 | 7.5″ |
| 18x11 | 175 | ″ |
| 18x10 | 192 | ″ |
| 18x9 | 213 | ″ |
| 16x12 | 185 | 6.5″ |
| 16x11 | 201 | ″ |
| 16x10 | 222 | ″ |
| 16x9 | 246 | ″ |
| 16x8 | 277 | ″ |
| 14x12 | 218 | 5.5″ |
| 14x11 | 238 | ″ |
| 14x10 | 262 | ″ |
| 14x9 | 291 | ″ |
| 14x8 | 327 | ″ |
| 14x7 | 374 | ″ |
| 12x10 | 320 | 4.5″ |
| 12x9 | 356 | ″ |
| 12x8 | 400 | ″ |
| 12x7 | 457 | ″ |
| 12x6 | 534 | ″ |

Inventories vary with demand. For a size or thickness not listed, please contact our sales office.

NCS THE 100 YEAR ROOF®

**North Country Slate®**

**North Country Slate®**
880 Milner Ave. – Unit B
Toronto, Ontario
Canada M1B 5N7

Toll Free: 1-800-975-2835
Fax: 416-724-2807
E-mail: info@ncslate.com
Website: www.northcountryslate.com

Exhibit **B**
504 Concord Avenue
Addendum to COA application
October 11, 2019

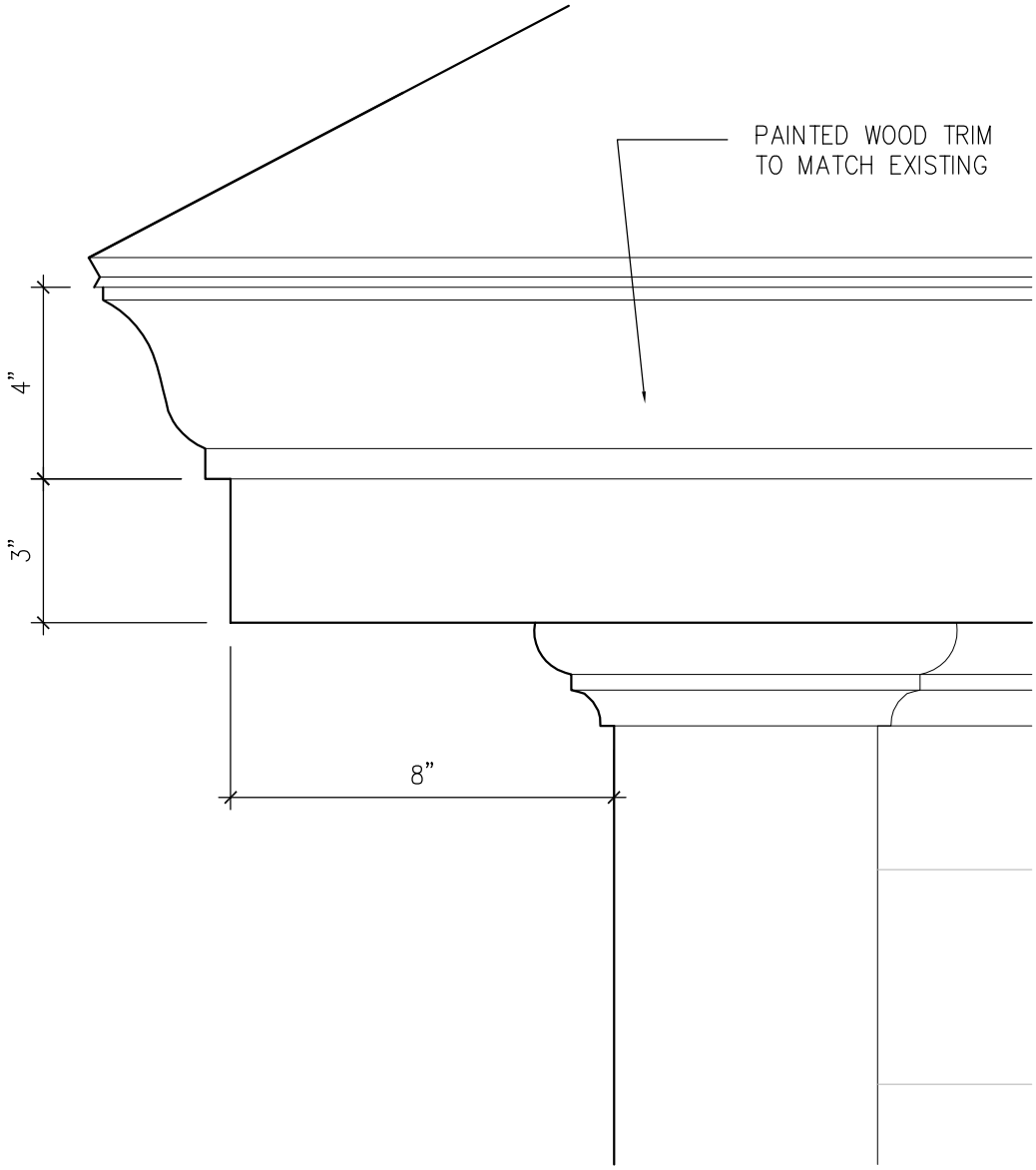


CORNICE DETAIL
SCALE: 3"=1'-0"

EXHIBIT B

WOOD XL-100 HUNG WITH 908 BRICKMOULD AND HISTORIC SILL

Exhibit **C**
504 Concord Avenue
Addendum to COA application
October 11, 2019

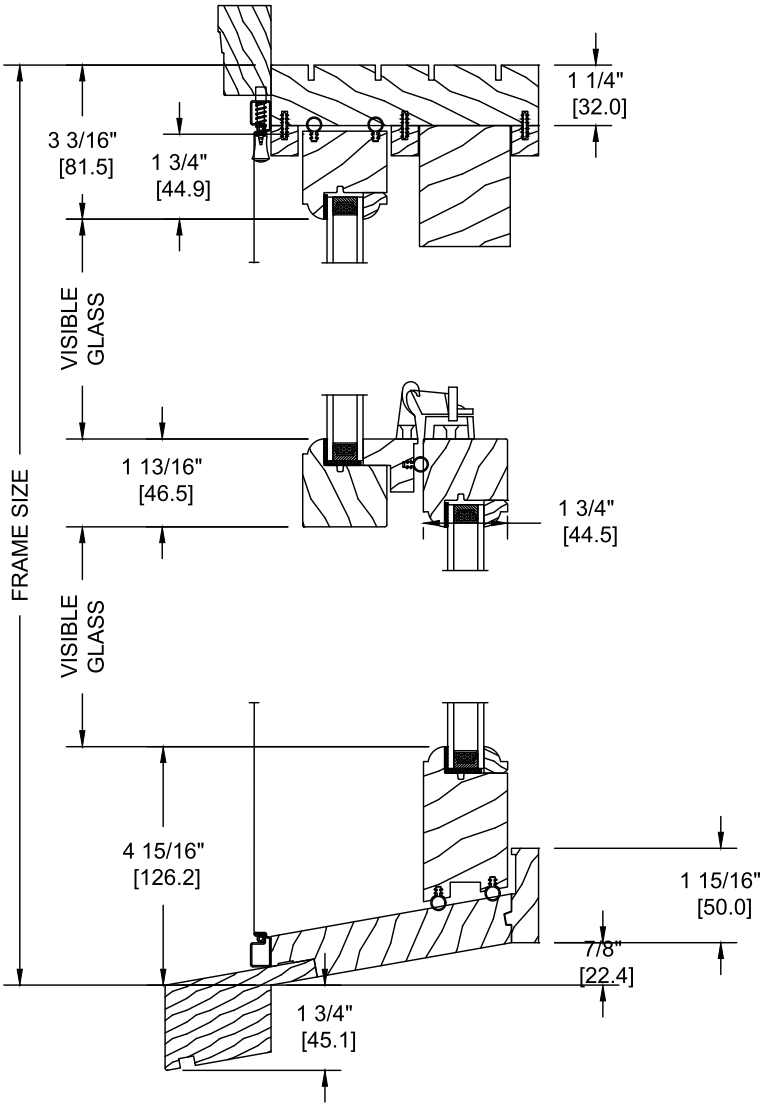


VERTICAL SECTION

LEPAGE MILLWORK

NOVEMBER 2016 SCALE: 3" = 1'-0" PAGE 1/8

Exhibit **C**
504 Concord Avenue
Addendum to COA application
October 11, 2019

## Manu Data

---

### Double Hung Window XL-100 – Wood

**Frame:**
-Pine, red grandis or mahogany
-Thickness 1 7/8" (48mm)
-Depth 5 9/16" (141mm)

**Sash:**
-Pine, red grandis or mahogany
-Thickness 1 ¾" (44.5mm)
-Height: 1 13/16" (46mm) / 3 ¼" (82mm)
-Colonial or putty glaze

**Interior finish:**
-Natural, primed, first coat, Lepage stain or paint over 50 colors

**Exterior finish:**
-Natural, primed, first coat, Lepage stain or paint over 50 colors

**Hardware:**
-Surface mount: satin nickel, unlaquered brass, polish brass, polish nickel or oil rubbed bronze
-Hybride balance lite-lift class 5

**Weather-strip**
-Silicone, Q-Lon

**Insulated glass:**
-Double glaze ¾" (19 mm)
-"Technoform" spacer, bronze, white, black or grey.
-Argon

**Glass available:**
-Clear, grey, bronze, pinhead, glue-chip
-Low-e: Energy advantage, 272, 366, I89
-Tempered
-Laminated

**Screen:**
-Mesh: invisible fiberglass, grey or black aluminium
-Surround: white, coppertone or Lepage paint over 50 colors
-Wood screen surround
-Retractable

Exhibit **C**
504 Concord Avenue
Addendum to COA application
October 11, 2019

**Grilles:**
-Removable 7/8”
-Internal georgian ¾ ", 1" or 1 ¾"
-Internal flat 5/16", ⅝", ¾ " or 1"
-Internal tubular: white, brass or pewter

**Simulated Divided Lites (SDL):**
-⅝", ⅞", 1 ¼" or 1 ¾"
-Spacer bars bronze, grey, white or black

**True Divided Lites (TDL):**
-TDL 1 ¾"
-TDL 1 ¼" (putty glaze sash)

**Casing:**
-908
-Colonial
-1 ¼” x 3 ½" Flat casing
-1 ¼” x 4 ½" Flat casing
-1 ¼” x 5 ½" Flat casing

**Sill Extension:**
-Standard GB-021 (1" x 1 ¼")
-Standard GB-040 (1" x 3")
-Historical GB-036 (1¾" x 2 ¼")
-Historical GB-058 (1¾" x 3")

**Exterior Jamb Extension:**
-Finish and wood species same as exterior frame 1/8" min and 3" max

**Interior Jamb Extension:**
-Finish and wood species same as interior frame 1/8" min and 6" max

**Minimums and Maximums:**

| | | | |
|---|---|---|---|
| Minimum width: | 12" | Maximum width: | 66" |
| Minimum height: | 26" | Maximum height: | 152" |

Maximum: 43 square foot – (frame size) for double IG

**For more information, please visit our web site at www.lepagemillwork.com**

Exhibit **D**
504 Concord Avenue
Addendum to COA application
October 11, 2019

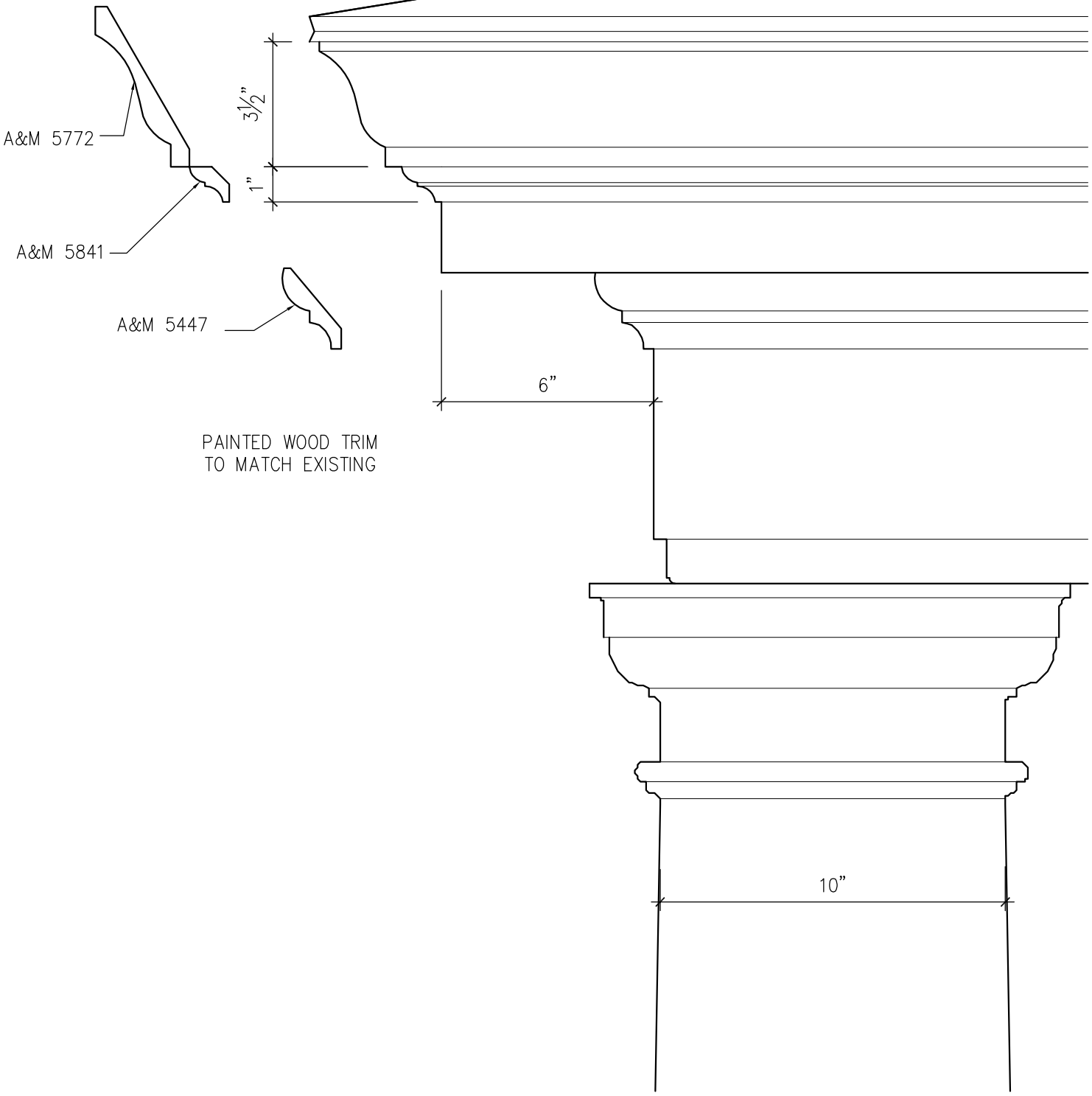


PORCH EAVE DETAIL
SCALE: 3"=1'-0"

EXHIBIT D

Exhibit **D**
504 Concord Avenue
Addendum to COA application
October 11, 2019

translucent glass
bronze finish

## Vintage VICM-12

**sku#: VICM-12**

12" Vintage Ceiling Mount

- **Dimensions:** 12"W x 7.25"H
- **Extension:**
- **Canopy/Back Plate Dimensions:** 13.5" sq.
- **Mounting Center to Top:**
- **Bulb Type:** 2-60W Medium (not included)
- **Safety Rating:** Suitable for Damp Locations
- **Finish Shown:** Bronze
- **Ships Via:** Small Parcel

---

**Arroyo Craftsman** 4509 Littlejohn Street, Baldwin Park, CA 91706

626-960-9411 | arroyo-info@framburg.com

Roman Doric Specifications

Exhibit **E**
504 Concord Avenue
Addendum to COA application
October 11, 2019

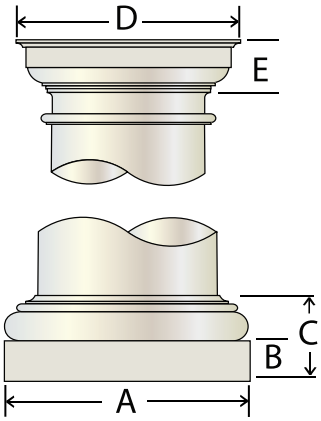


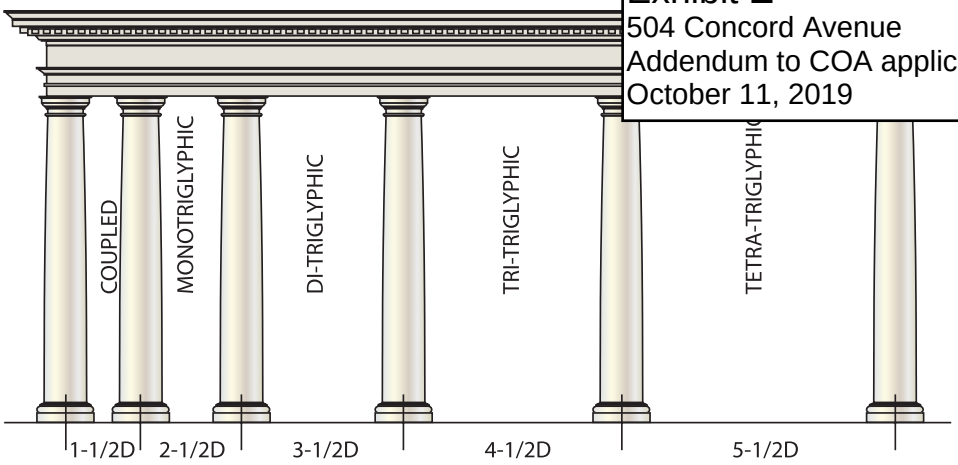


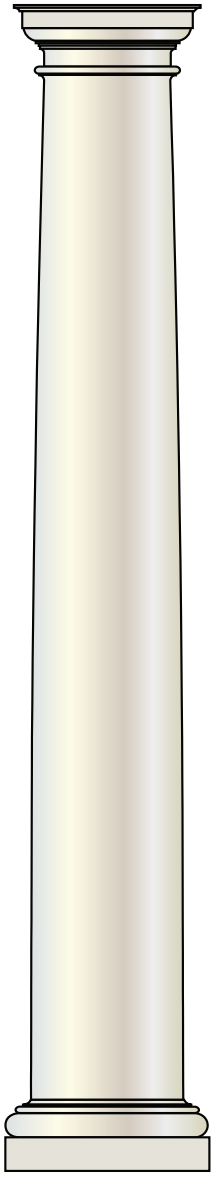

## ROMAN DORIC SPECIFICATIONS

| Shaft nominal bottom diameter | Shaft Specifications | | | | | | Roman Doric Cap and Base Specifications | | | | | |
|---|---|---|---|---|---|---|---|---|---|---|---|---|
| | Bottom | | Top | | Flutes | | Base | | | Cap | | Materials |
| | Net O.D. | Net I.D. | Net O.D. | Net I.D. | Number | Width | Plinth width (A) | Plinth height (B) | Total height (C) | Abacus width (D) | Total height (E) | Wood, Fiberglass, Polyurethane |
| 4” | 4” | 0 | 3 ¼” | 0 | 18 | 7⁄16” | 5 ⅜” | 1” | 2 ⅛” | 5 ⅛” | 1 ½” | W P |
| 6” | 6” | 3” | 4 ¾” | 2 ½” | 24 | ½” | 8” | 1” | 3 ¼” | 7 ½” | 2” | W P |
| 8” | 8” | 5 ¼” | 6 ½” | 4 ⅜” | 24 | 11⁄16” | 10 ¾” | 1 ⅞” | 4 ¼” | 9 ¾” | 2 ⅝” | W P |
| 10” | 10” | 7 ¼” | 8 ½” | 6 ⅜” | 24 | ⅞” | 13 ⅜” | 2 ⅜” | 5 ⅜” | 12 ½” | 3 ⅛” | W P |
| 12” | 12” | 9” | 10” | 7 ¾” | 24 | 1” | 16 ⅛” | 2 ¾” | 6 3⁄16” | 14 ¾” | 4” | W P |
| 14” | 14” | 10 ⅛” | 12” | 9” | 24 | 1 ¼” | 18 ¾” | 3 ⅜” | 7 ⅜” | 17 ½” | 4 11⁄16” | W P F |
| 15” | 15” | 11 1⁄16” | 12 ¾” | 10” | 24 | 1 11⁄32” | 20 ⅛” | 3 ⅝” | 8 1⁄16” | 18 11⁄16” | 5 1⁄32” | W P |
| 16” | 16” | 12” | 13 ½” | 10” | 24 | 1 7⁄16” | 21 ½” | 3 ⅞” | 8 ¾” | 19 ⅞” | 5 ⅜” | W P F |
| 18” | 18” | 14 ¼” | 15” | 12” | 24 | 1 ½” | 24 ¼” | 4 ¼” | 9 ⅞” | 22 ¼” | 6” | W F |
| 20” | 20” | 16 ¼” | 17” | 13” | 24 | 1 11⁄16” | 27” | 4 ¾” | 11” | 25” | 6 ¾” | W F |
| 22” | 22” | 18 ¼” | 18 ½” | 15” | 24 | 1 15⁄16” | 29 ¾” | 5 ¼” | 12” | 27 ⅜” | 7 ⅜” | W F |
| 24” | 24” | 20 ¼” | 20” | 17” | 24 | 2 ⅛” | 32 ½” | 5 ¾” | 13 ¼” | 29 ¾” | 7 15⁄16” | W F |
| 26” | 26” | 22 ⅛” | 22” | 19” | 24 | 2 ¼” | 35” | 6 ¼” | 14 ⅜” | 32 ½” | 8 11⁄16” | W F |
| 28” | 28” | 24 ⅛” | 23 ½” | 21” | 24 | 2 11⁄16” | 38” | 6 ¾” | 15 ⅜” | 34 ⅝” | 9 ⅜” | W F |
| 30” | 30” | 26 ¼” | 25” | 22” | 24 | 2 ⅞ | 40 ½” | 7 ¼” | 16 ⅝” | 37” | 9 15⁄16” | W F |
| 32” | 32” | 27” | 27” | 23” | 24 | 3” | 42 ¾” | 7 ¾” | 17 ¾” | 39 ¼” | 10 9⁄16” | F |
| 34” | 34” | 29” | 28 ½” | 24 ½” | 24 | 3 ¼” | 45 ½” | 8 ½” | 19 ¼” | 42 ⅛” | 11 5⁄16” | F |
| 36” | 36” | 31” | 30” | 26” | 24 | 3 ¼” | 48” | 9” | 20 ¼” | 44 ⅛” | 12” | F |

## CALCULATED SAFE-LOAD CAPACITIES

| Diameter | Pine | Cedar | Available Heights* |
|---|---|---|---|
| 6” | 2,567 lb. | 5,146 lb. | 3’ to 10’ |
| 8” | 4,114 lb. | 7,646 lb. | 4’ to 12’ |
| 10” | 5,497 lb. | 10,474 lb. | 5’ to 16’ |
| 12” | 6,620 lb. | 12,535 lb. | 6’ to 20’ |
| 14” | 11,017 lb. | 15,282 lb. | 6’ to 20’ |
| 16” | 12,307 lb. | 17,343 lb. | 6’ to 24’ |
| 18” | 14,487 lb. | 19,404 lb. | 6’ to 24’ |
| 20” | 16,688 lb. | 22,151 lb. | 6’ to 30’ |
| 22” | 18,426 lb. | 24,212 lb. | 8’ to 30’ |
| 24” | 20,018 lb. | 26,272 lb. | 8’ to 30’ |
| 26” | 22,252 lb. | 36,870 lb. | 8’ to 30’ |
| 28” | 24,001 lb. | 39,519 lb. | 8’ to 30’ |
| 30” | 25,746 lb. | 42,169 lb. | 8’ to 30’ |
| 32” | 42,080 lb. | 55,317 lb. | 8’ to 30’ |
| 34” | 44,567 lb. | 57,476 lb. | 8’ to 30’ |
| 36” | 47,054 lb. | 61,794 lb. | 8’ to 30’ |

The sample columns tested supported loads at least four times the calculated values to the left prior to failure. The load was applied concentrically through the axis of the column. Loads shown are valid only if there is uniform contact between the full area of column ends and the cap and base units. Loads are provided for your convenience only and are not exact values. Consult a structural engineer for the most accurate load estimates.

* Custom sizes available on request.

## PLAN TYPES

Architectural Columns are available in the following plan types. Please specify when you order. Custom plan types are also available. (Fractional components shown are typical. Customer may specify actual returns, wall thicknesses, etc).

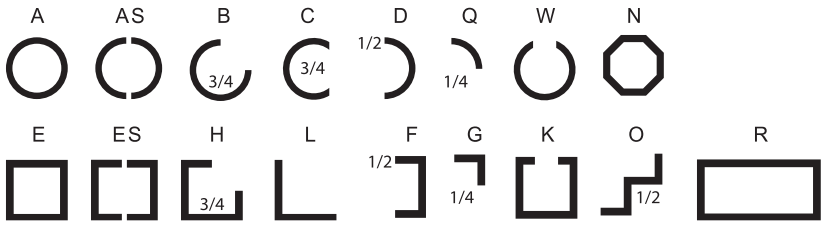

## Comparison of the Orders

Exhibit **E**
504 Concord Avenue
Addendum to COA application
October 11, 2019

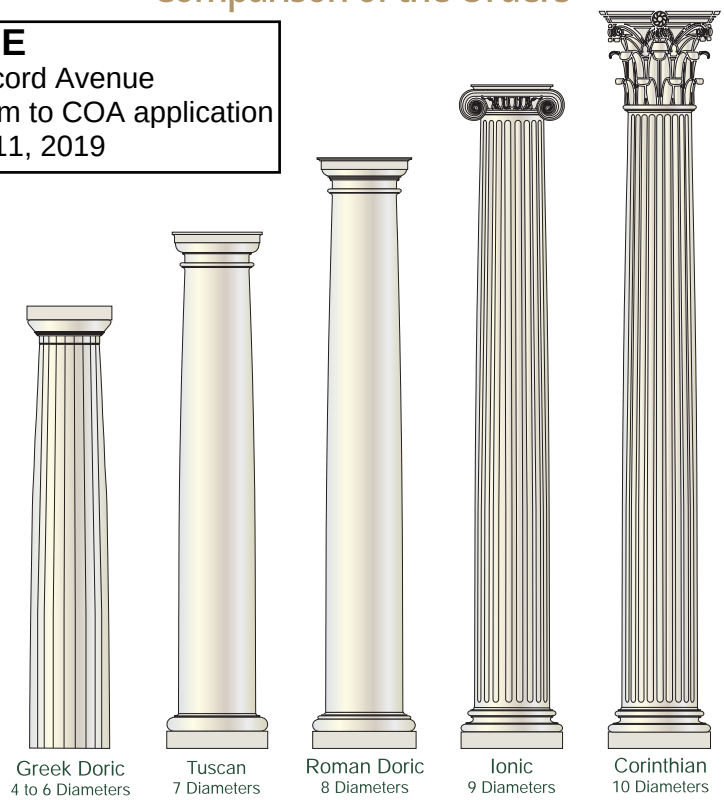


Turncraft Architectural wood columns are our premier product for precise attention to detail both in design and quality. Unlike FRP columns, where the manufacturing processes dictate some alterations to details, our wood columns are closest to true architectural specifications such as proportion, fluting and entasis (taper or bow).

Architectural columns are best proportioned when following the suggestions of William Ware (*The American Vignola*), Robert Chitham (*The Classic Orders of Architecture)*, Palladio and others to emulate the ancient architecture of Greece and Rome. The illustration "Comparison of the Orders" shows how the height and diameter ratio affects columns of a similar diameter. Tip: to determine the correct diameter for a column in the height you need, simply divide the height by the diameter factor given below the style chosen. For example, at a two-story height of 198", an Ionic column (9 diameters) should be 22" in diameter (198/9=22), or a Tuscan column (7 diameters) should be 28" in diameter.

In addition to the round columns shown, Turncraft Architectural can provide wood columns in non-architectural proportions, in many plan types, including squares, octagons and pilasters, either straight or tapered, as well as coupled columns, and other custom configurations.

Using our computerized lathes, our wood columns typically have the correct column entasis (taper or bow) – the lower one-third of the shaft is straight, and the upper two-thirds has a diminishing taper. The "Entasis Taper" illustration shows precisely how this is generated. We also have the ability to customize the shaft taper. For example, straight tapers are common, as well as barrel columns where the center of the shaft is larger than both ends.

Entasis Taper

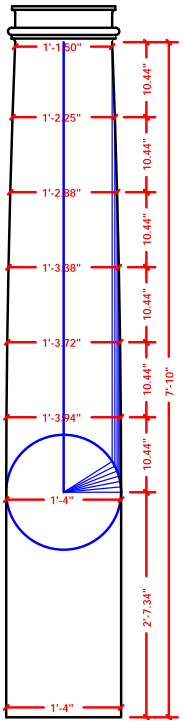


For exterior use, the recommended wood for shafts is cedar because of it's inherent resistance to insects and wood rot, and carries a ten year limited warranty. Pine is also available, with a one year limited warranty. Cap and base for exterior columns are usually polyurethane (up to 16" columns) or fiberglass (18" and larger).

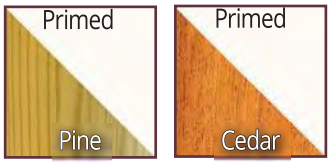


For interior use, Turncraft is able to manufacture columns from a wide variety of woods. Paint grade woods are typically finger-jointed pine or poplar, and stain grade can be practically any species imaginable.

Our most popular stain grade species are red oak, mahogany, cherry, maple, alder, and walnut. The examples here show the differences in grain and color. However it's best to keep in mind that the finish used affects the final color, so this isn't an exact match.

Exhibit **F**
504 Concord Avenue
Addendum to COA application
October 11, 2019

# Manu Data

## French Door – Wood

**Frame:**
-Pine, red grandis or mahogany
-Thickness 1 ¼" (32mm)
-Depth 4 9/16" (116mm), 6 9/16" (167mm) or 7 ¼" (184mm)

**Panel:**
-Pine, red grandis or mahogany
-Thickness 1 ¾" (44.5mm) or 2 ¼" (57mm)
-Colonial or putty glaze
-Stiles and top rail width: 5" or 3 5/8"
-Bottom rail 9", 5" or 3 5/8"
-Choice of flat or raised panels

**Interior finish:**
-Natural, primed, first coat, Lepage stain or paint over 50 colors

**Exterior finish:**
-Natural, primed, first coat, Lepage stain or paint over 50 colors

**Hardware:**
-Adjustable hinges: satin chrome, antique nickel, polish brass, antique brass, oil rubbed bronze or black
-4" x 4" ball bearing: satin chrome, antique nickel, polish brass, antique brass, oil rubbed bronze or black
-4 ½" x 4 ½" ball bearing: satin chrome, polish chrome, satin nickel, antique nickel, polish brass, unlaquered brass, antique brass, oil rubbed bronze or black
-Stainless steel multi-point lock
-Traditional or contemporary handles: satin chrome, satin nickel, antique nickel, polish brass, antique brass, oil rubbed bronze or black

**Weather-strip**
-Silicone

**Insulated glass tempered:**
-Double glaze ¾" (19 mm)
-Triple glaze 1 ¼" (32mm) with 2 ¼" (57mm) sash
-"Technoform" spacer, bronze, white, black or grey.
-Argon

**Glass available:**
-Clear, grey, bronze, pinhead, glue-chip
-Low-e: Energy advantage, 272, 366, I89
-Laminated

Exhibit **F**
504 Concord Avenue
Addendum to COA application
October 11, 2019

**Screen:**
-AS-07 all aluminium sliding screen
-Wood screen, panel 1 ¾" (44.5mm), with hinges
-Combo with glass and available with flat or raised panel

**Grilles:**
-Internal georgian ¾", 1" or 1 ¾"
-Internal flat 5/16", ⅝", ¾" or 1"
-Internal tubular: white, brass or pewter

**Simulated Divided Lites (SDL):**
-⅝", ⅞", 1 ¼" or 1 ¾"
-Spacer bars bronze, grey, white or black

**True Divided Lites (TDL):**
-TDL 5", 3 5/8" or 1 ⅞"

**Casing:**
-908
-Colonial
-1 ¼" x 3 ½" Flat casing
-1 ¼" x 4 ½" Flat casing
-1 ¼" x 5 ½" Flat casing

**Exterior Jamb Extension:**
-Finish and wood species same as exterior frame 1/8" min and 2" max

**Interior Jamb Extension:**
-Finish and wood species same as interior frame 1/8" min and 6" max

**Minimums and Maximums:**

| | | | |
|---|---|---|---|
| Minimum width (simple): | 21 13/16"<br>26 ½" | Minimum width (double): | 42" - 1 ¾"<br>51 ½" - 2 ¼" |
| Maximum width (simple): | 50 ¾" | Maximum width (double): | 99 ⅞" |
| Maximum height: | 108" | | |

| | |
|---|---|
| Minimum height (with Multipoint - inswing): | 72 ¾" |
| Minimum height (with Multipoint - outswing): | 71 ¾" |
| Minimum height (with Multipoint – Handicapped sill): | 71 3/16" |
| Minimum height (without multipoint) | 48" |

Minimum: 24 square foot (IG)

**For more information, please visit our web site at www.lepagemillwork.com**

WOOD 2 1/4" PANEL INSWING FRENCH DOOR WITH
908 BRICKMOULD CASING AND 6 9/16" FRAME

Exhibit **F**
504 Concord Avenue
Addendum to COA application
October 11, 2019

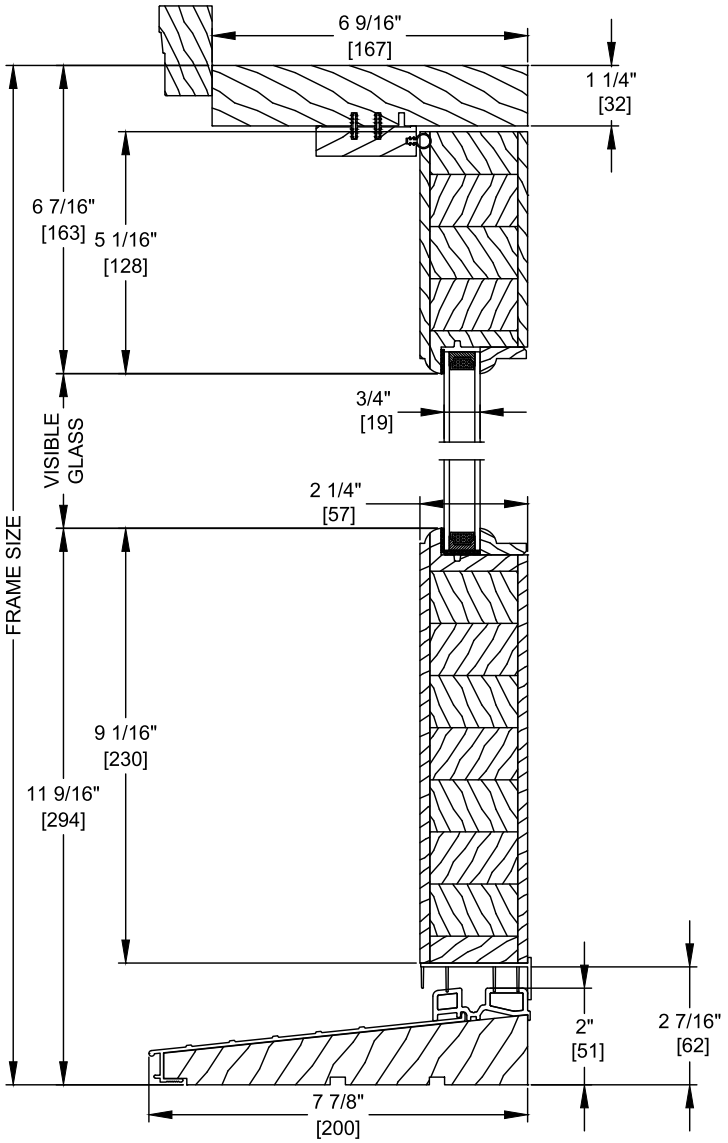


VERTICAL SECTION

LEPAGE MILLWORK

MAY 2017 SCALE: 3" = 1'-0" PAGE 11/27

WOOD 1 3/4" PANEL INSWING FRENCH DOOR
MAHOGANY SILL OPTION

**Exhibit F**
504 Concord Avenue
Addendum to COA application
October 11, 2019

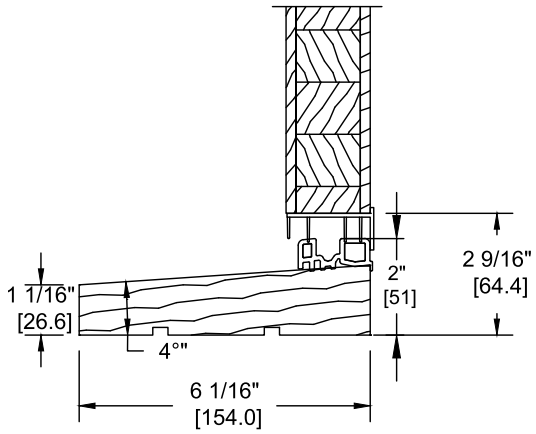


INSWING 4 $\frac{9}{16}$" FRAME

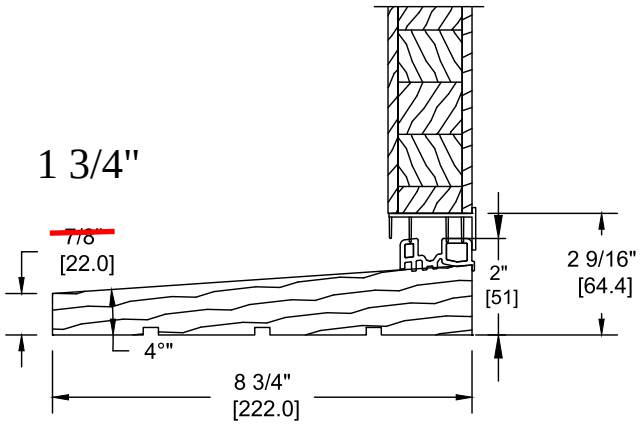


INSWING 6 $\frac{9}{16}$" FRAME

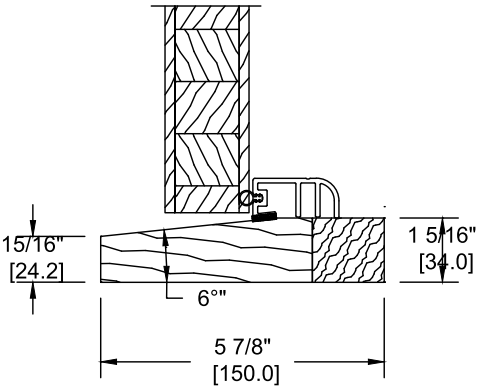


OUTSWING 4 $\frac{9}{16}$" FRAME

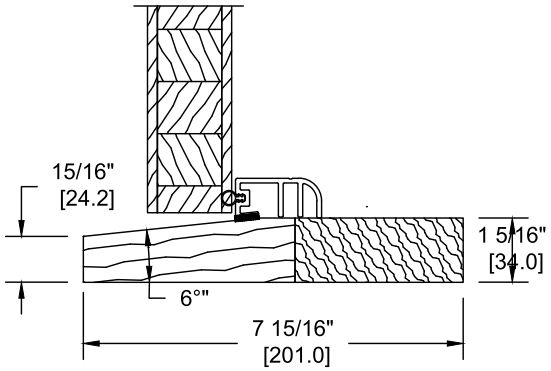


OUTSWING 6 $\frac{9}{16}$" FRAME

LEPAGE
MILLWORK

MAY 2017

SCALE: 3" = 1'-0"

Exhibit **G**
504 Concord Avenue
Addendum to COA application
October 11, 2019

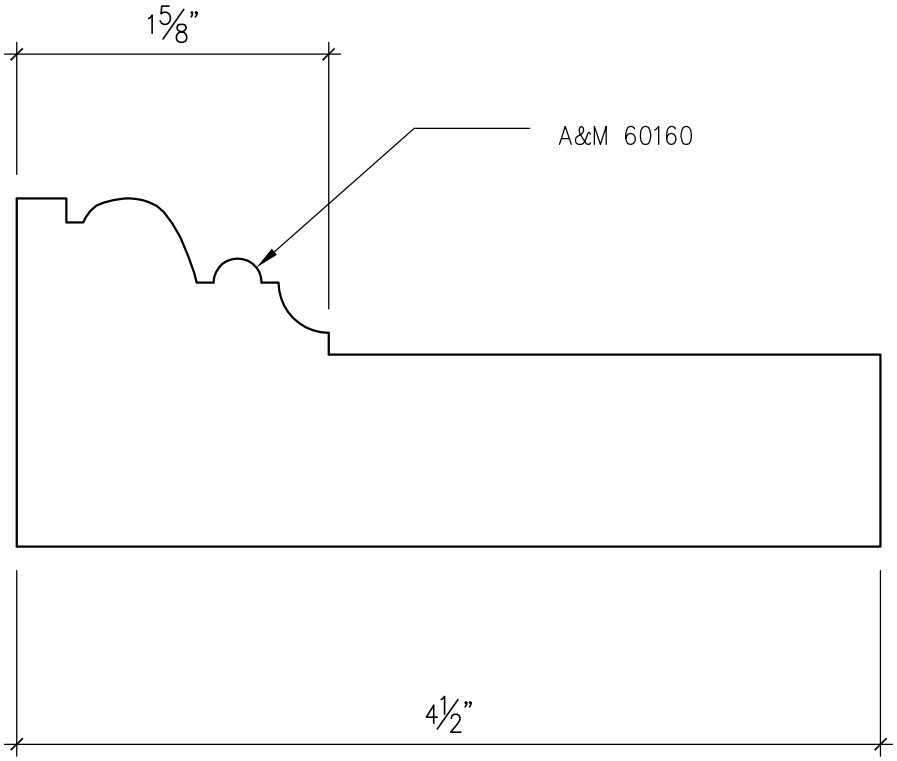


PAINTED WOOD CASINGS
TO MATCH EXISTING

CASING DETAIL
SCALE: FULL SCALE

EXHIBIT G

Exhibit **H**
504 Concord Avenue
Addendum to COA application
October 11, 2019

# Carriage™ Lantern

We like the Carriage Lantern for its simplicity of style, straightforward design, and versatility of use. Our customers have installed the Carriage Lantern in a wide variety of American vernacular home styles, including New England saltbox, Midwest farmhouse, and Shaker-inspired dwellings.

Overlay Options:

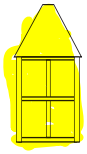

WP
Windowpane
Overlay

CC
Crosscut
Overlay

SR
Sawbridge
Overlay

*All dimensions in inches*

| | MOUNT DESCRIPTION | MODEL NUMBER | ROOF WIDTH | LANTERN HEIGHT | OVERALL LENGTH | MINIMUM LENGTH *Specify overall length in 1" increments* | PROJECTION | SUPPORT BRACKET | MOUNTING PLATE | OPTIONAL BOTTOM PANEL | OPTIONAL PIER MOUNT | MAXIMUM STANDARD WATTAGE | OPTIONAL SOCKET CLUSTER/ WATTAGE |
|---|---|---|---|---|---|---|---|---|---|---|---|---|---|
| | Straight Arm Wall Mount *Shown with support bracket* | **EX-5104-A10** | 4 | 9-1/2 | 12-1/2 | | 6 | | 5 dia | | | 1/150 | |
| | | **EX-5106-A10** | 6 | 12 | 15 | | 8 | | 5 dia | • | | 1/150 | 2/60 |
| | | **EX-5107-A10** | 7 | 14-3/4 | 17-3/4 | | 9 | | 5 dia | • | | 1/150 | 2/60 |
| | | **EX-5108-A10** | 8 | 17-1/2 | 20-3/4 | | 11 | • | 5 dia | • | | 1/150 | 3/100 |
| | | **EX-5110-A10** | 10 | 21-1/2 | 25-3/4 | | 12-1/4 | • | 7 dia | • | | 1/150 | 3/100 |
| | | **EX-5112-A10** | 12 | 25-1/2 | 29-3/4 | | 13-1/2 | • | 7 dia | • | | 1/150 | 3/100 |
| 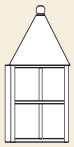 | Flush Wall Mount | **EX-5104-A15** | 4 | 9-1/2 | 10-1/2 | | 4-1/2 | | 4w x 6h | | | 1/150 | |
| | | **EX-5106-A15** | 6 | 12 | 13 | | 6-1/2 | | 5-1/2w x 7-1/2h | • | | 1/150 | 2/60 |
| | | **EX-5107-A15** | 7 | 14-3/4 | 15-3/4 | | 7-1/2 | | 7w x 9h | • | | 1/150 | 2/60 |
| | | **EX-5108-A15** | 8 | 17-1/2 | 18-1/2 | | 8-1/2 | | 8w x 10-1/2h | • | | 1/150 | 3/100 |
| | | **EX-5110-A15** | 10 | 21-1/2 | 22-3/4 | | 10-3/4 | | 10w x 13h | • | | 1/150 | 3/100 |
| | | **EX-5112-A15** | 12 | 25-1/2 | 26-3/4 | | 12-3/4 | | 12w x 15-1/4h | • | | 1/150 | 3/100 |
| | Flush Ceiling Mount | **EX-5104-A17** | 4 | 9-1/2 | 10-3/4 | | | | 5 dia | | | 1/150 | |
| | | **EX-5106-A17** | 6 | 12 | 13-1/4 | | | | 5 dia | • | | 1/150 | 2/60 |
| | | **EX-5107-A17** | 7 | 14-3/4 | 17 | | | | 6 dia | • | | 1/150 | 2/60 |
| | | **EX-5108-A17** | 8 | 17-1/2 | 19-3/4 | | | | 6 dia | • | | 1/150 | 3/100 |
| | Chain Mount *Specify overall length in 1" increments.* | **EX-5104-A18** | 4 | 9-1/2 | | 13 | | | 5 dia | | | 1/150 | |
| | | **EX-5106-A18** | 6 | 12 | | 16 | | | 5 dia | • | | 1/150 | 2/60 |
| | | **EX-5107-A18** | 7 | 14-3/4 | | 20 | | | 6 dia | • | | 1/150 | 2/60 |
| | | **EX-5108-A18** | 8 | 17-1/2 | | 23 | | | 6 dia | • | | 1/150 | 3/100 |
| | | **EX-5110-A18** | 10 | 21-1/2 | | 28 | | | 7 dia | • | | 1/150 | 3/100 |
| | | **EX-5112-A18** | 12 | 25-1/2 | | 33 | | | 7 dia | • | | 1/150 | 3/100 |
| | Stem Mount *Specify overall length in 1" increments.* | **EX-5104-A19** | 4 | 9-1/2 | | 12 | | | 5 dia | | | 1/150 | |
| | | **EX-5106-A19** | 6 | 12 | | 14 | | | 5 dia | • | | 1/150 | 2/60 |
| | | **EX-5107-A19** | 7 | 14-3/4 | | 18 | | | 6 dia | • | | 1/150 | 2/60 |
| | | **EX-5108-A19** | 8 | 17-1/2 | | 21 | | | 6 dia | • | | 1/150 | 3/100 |
| | | **EX-5110-A19** | 10 | 21-1/2 | | 25 | | | 7 dia | • | | 1/150 | 3/100 |
| | | **EX-5112-A19** | 12 | 25-1/2 | | 28 | | | 7 dia | • | | 1/150 | 3/100 |
| 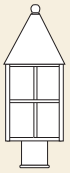 | Post Mount *Overall length does not include post fitter sleeve. Fits standard 3" dia. round post. Post not included; see page 42.* | **EX-5104-A22** | 4 | 9-1/2 | 10-1/2 | | | | | | • | 1/150 | |
| | | **EX-5106-A22** | 6 | 12 | 13 | | | | | | • | 1/150 | 2/60 |
| | | **EX-5107-A22** | 7 | 14-3/4 | 15-3/4 | | | | | | | 1/150 | 3/100 |
| | | **EX-5108-A22** | 8 | 17-1/2 | 18-1/2 | | | | | | | 1/150 | 3/100 |
| | | **EX-5110-A22** | 10 | 21-1/2 | 22-3/4 | | | | | | | 1/150 | 3/100 |
| | Column Mount *Overall length includes lantern with sub-base.* | **EX-5104-A23** | 4 | 9-1/2 | 11-1/4 | | | | 4-3/4 sq | | | 1/150 | |
| | | **EX-5106-A23** | 6 | 12 | 14 | | | | 6-1/4 sq | | | 1/150 | 2/60 |
| | | **EX-5107-A23** | 7 | 14-3/4 | 16-3/4 | | | | 7-3/4 sq | | | 1/150 | 3/100 |
| | | **EX-5108-A23** | 8 | 17-1/2 | 19-3/4 | | | | 9-1/4 sq | | | 1/150 | 3/100 |
| | | **EX-5110-A23** | 10 | 21-1/2 | 23-3/4 | | | | 11-1/2 sq | | | 1/150 | 3/100 |
| | | **EX-5112-A23** | 12 | 25-1/2 | 28-1/4 | | | | 13-3/4 sq | | | 1/150 | 3/100 |

Exhibit **H**
504 Concord Avenue
Addendum to COA application
October 11, 2019

| REVISIONS | | | |
|---|---|---|---|
| REV. | DESCRIPTION | DATE | APPROVED |
| | | | |

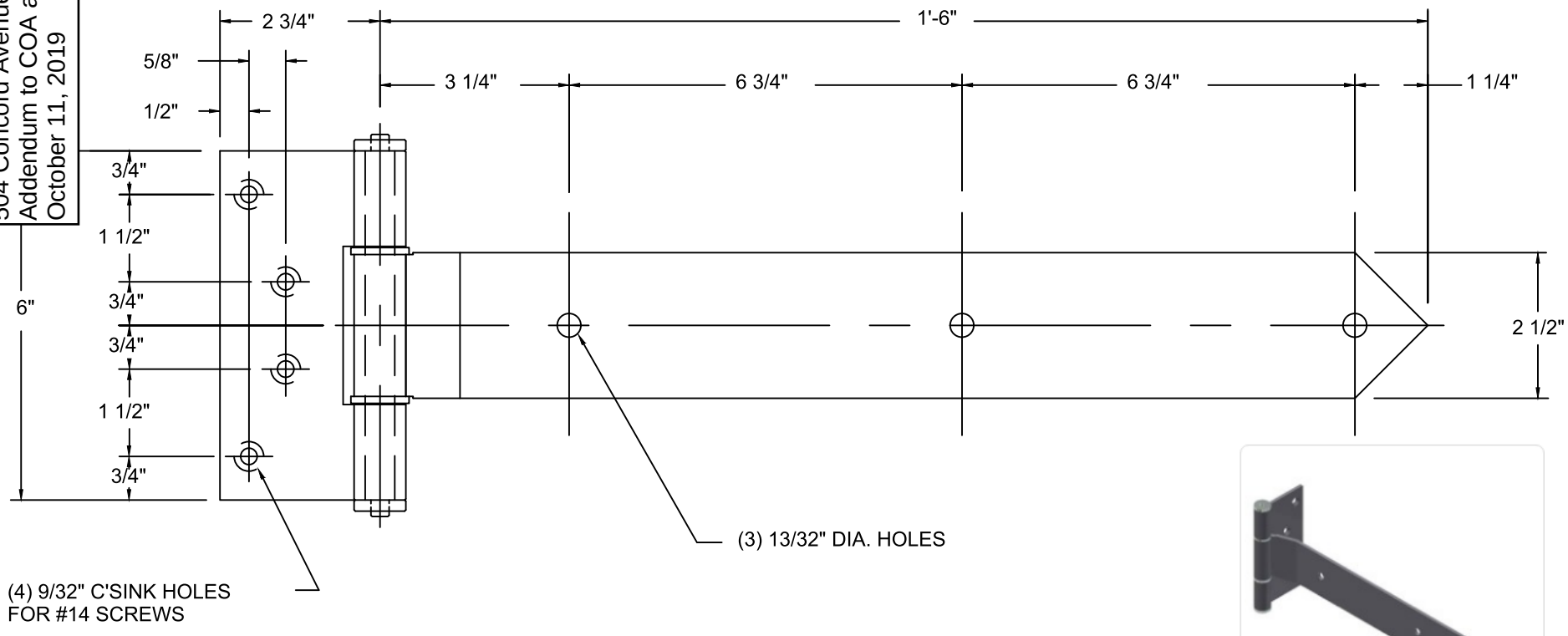

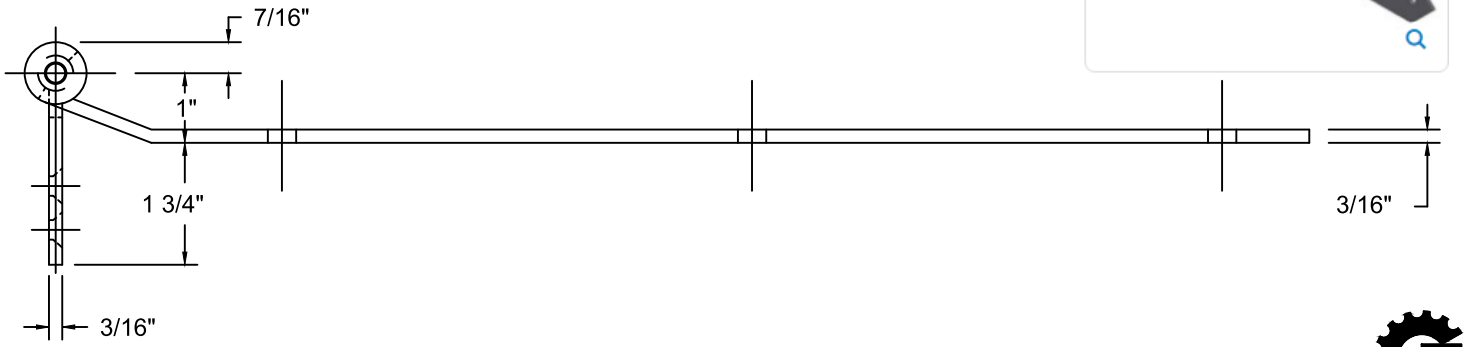


NOTE:
PINTLE SHOWN IN FULL
CLOSED POSITION
MILD STEEL
FINISH:
POWDER COAT "TAN"

DWG #9036-P31
DESCRIP: Hinge, Disc Bearing
DRAWN:BCM
SHEET # 1
FILE:\\crown-fs\main\engineering\hardware\hinges\9036\9036-p31

THE INFORMATION CONTAINED IN THIS DRAWING IS THE SOLE PROPERTY OF CROWN INDUSTRIAL. ANY REPRODUCTION IN PART OR AS A WHOLE WITHOUT WRITTEN PERMISSION OF CROWN INDUSTRIAL IS PROHIBITED.
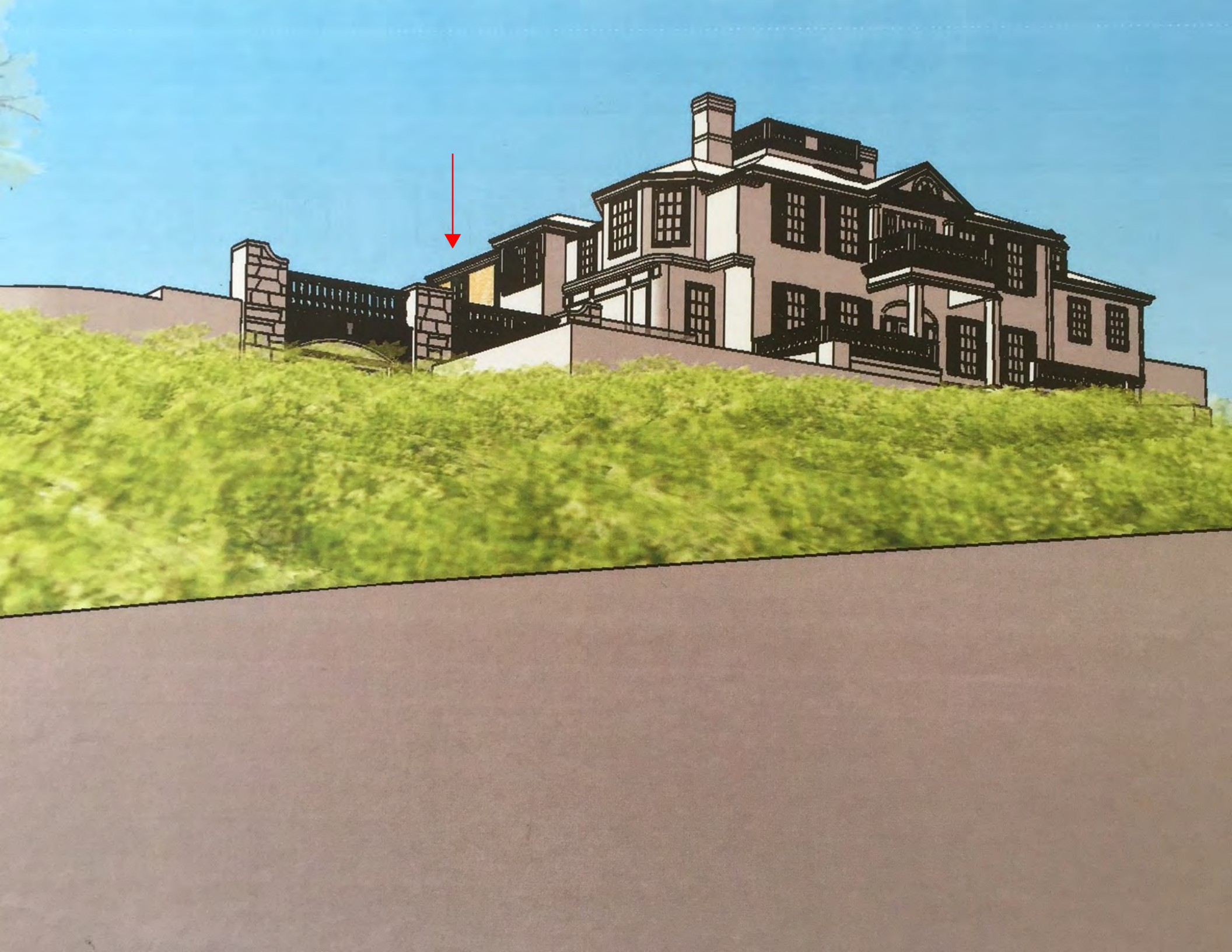
**CROWN INDUSTRIAL**
**So. San Francisco, Ca**
**(650) 952-5150**
**www.crown-industrial.com**