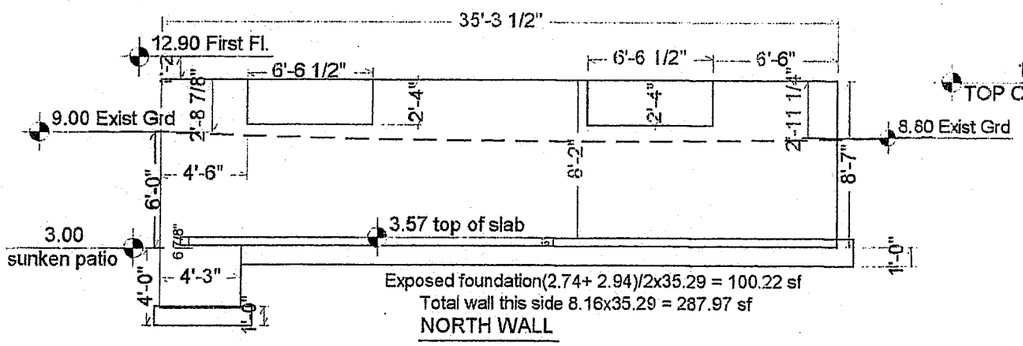

Exposed foundation(2.74+ 2.94)/2x35.29 = 100.22 sf
Total wall this side 8.16x35.29 = 287.97 sf

NORTH WALL

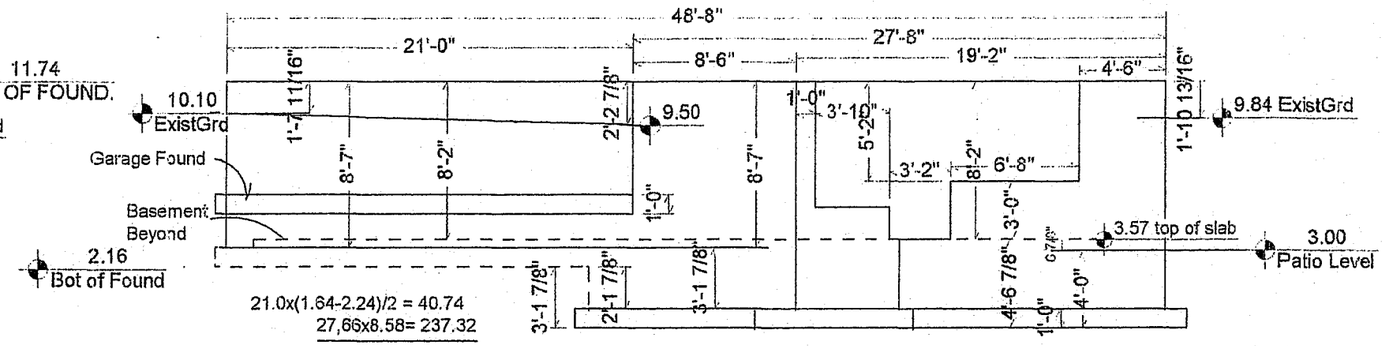

21.0x(1.64-2.24)/2 = 40.74
27,66x8.58= 237.32

278.06 sf exposed foundation
Total wall this side 48.66)x8.16 = 397.06 sf

EAST WALL

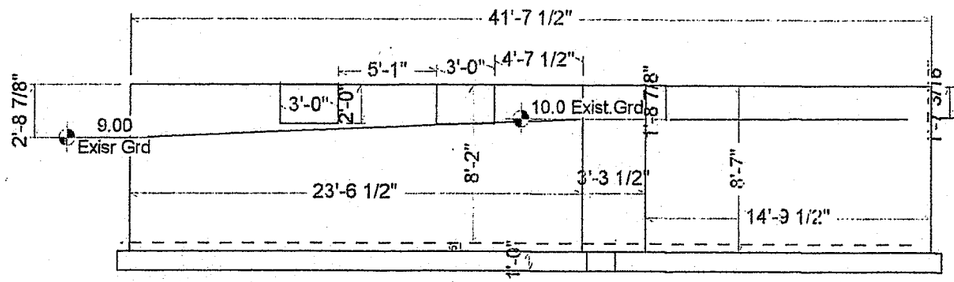

(2.74+1.74)/2x23.54= 52.73
1.74x3.29=5.72 } 83.15 exposed this side
(1.60+1.74)/2x14.79=24.70

41.625x8.16 = 340.00 sf total basement wall this side

WEST WALL

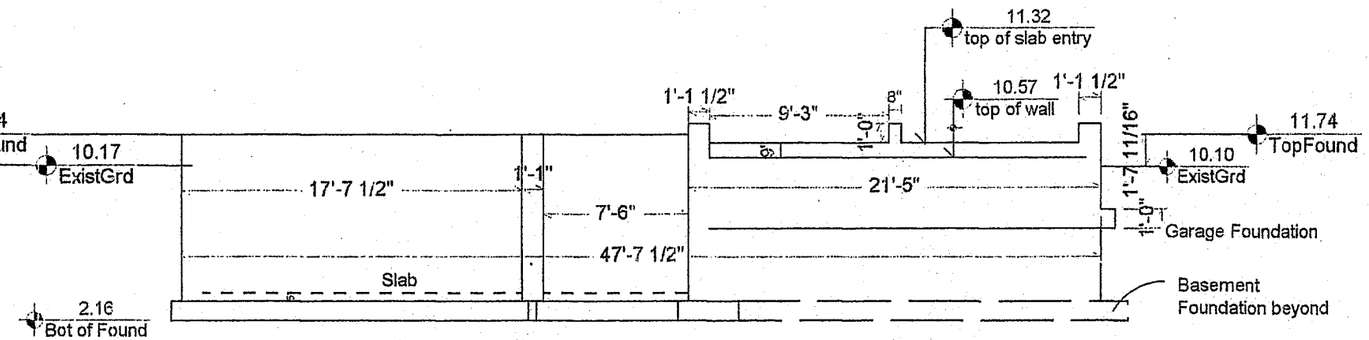

47.62x(1.6) = 76.19 sf exposed basement wall
47.62x8.16 = 388.58 sf total basement wall this side

SOUTH WALL

TOTAL EXPOSED BASEMENT WALL = 100.22+278.06 + 83.15 + 76.19 = 537.62 sf

TOTAL INSIDE BASEMENT WALL = 287.97+397.06+340.0+388.58 = 1413.61 SF
RATIO OF EXPOSED BASEMENT = 537.62/1413.61 = 38.03% < 40%

PERIMETER OF FOUNDATION = 35.29+19.16+8.25+21.0+21.41+2.92+7.5+1.16+17.92+14.79+3.29+23.54 =176.23 Lin ft.

AVARGE GRADE:

(9+8.8)x1/2x35.29 = 314.08
(9.0+9.5)/2x19.16 = 177.23
9.5x8.25=76.31
9.5+10.1)/2x21 = 205.8
(10.1+10.17)/2x(17.92+1.16+7.5+2.92+21.42)=
10.135x50.92 = 516.07
(10.17+10.0)/2x14.79= 149.16
3.29x10.0=32.9
(10.0+8.8)/2x23.54=221.28

TOTAL 1692.83

Avarage Grade=1692.83 / 176.23 = 9.6

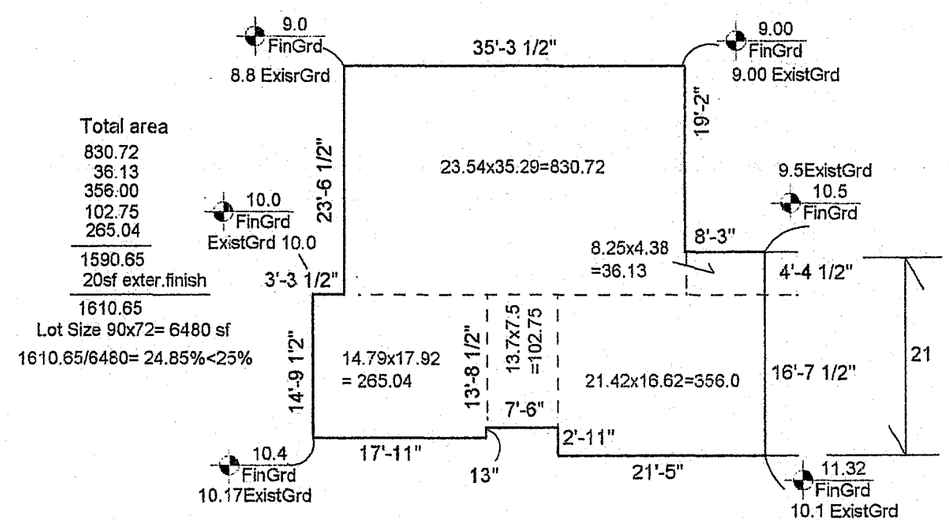

Total area
830.72
36.13
356.00
102.75
265.04
1590.65
20sf exter.finish
1610.65

Lot Size 90x72= 6480 sf
1610.65/6480= 24.85%<25%

9 WESTLUND ROAD BELMONT MA	NORDESIGN & BUILD LLC ARCHITECTS 21 HOUGH ROAD BELMONT MA 02478 617-283-5299	FOUNDATION WALLS & EXISTING GRADE ELEVATIONS & CALCULATIONS1/8"=1'-0"	12/14/15	DWG 0-1

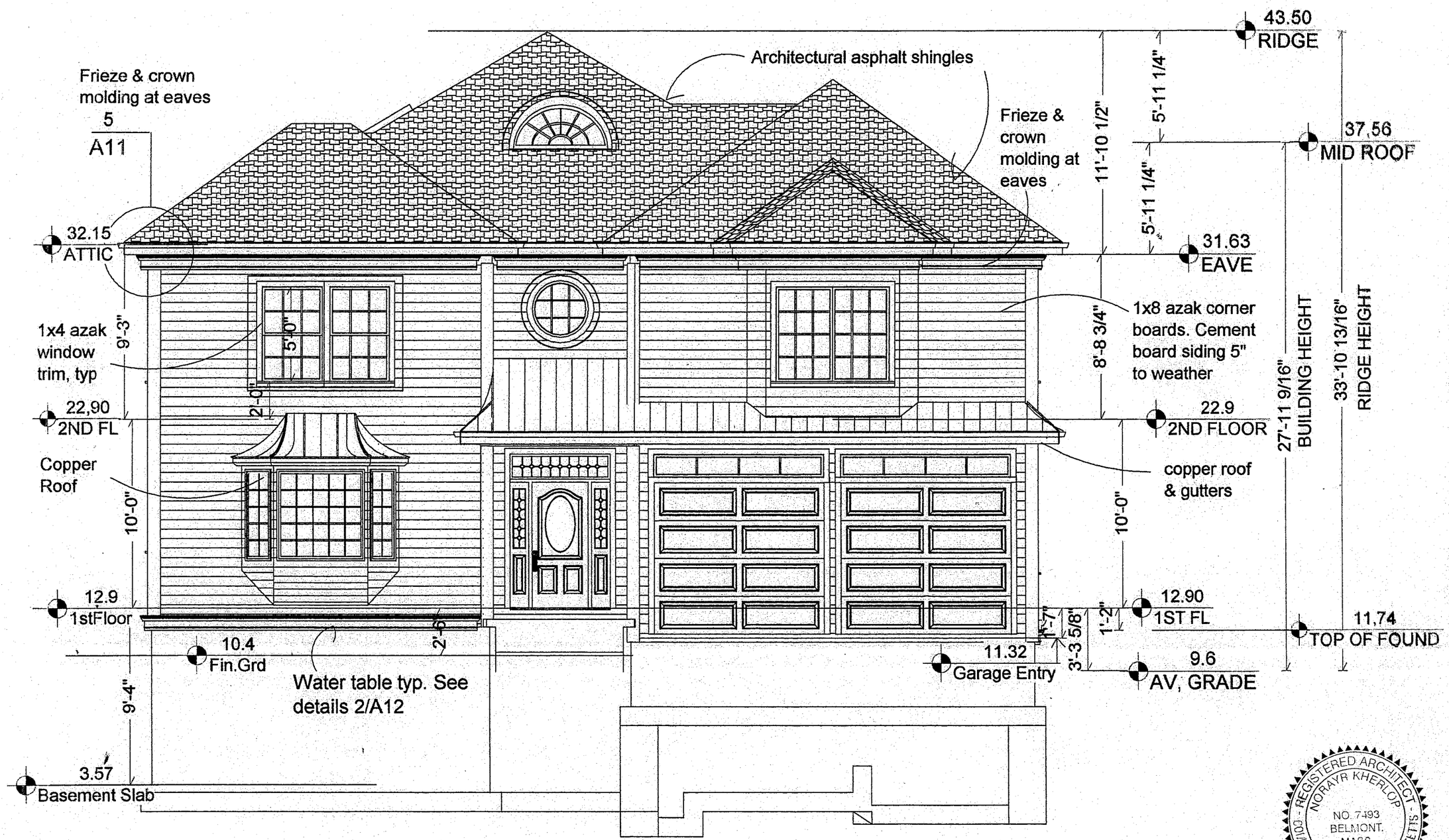

A-5
12/15/15

FRONT (SOUTH) ELEVATION
3/16"=1'-0"

NORDESIGN & BUILD LLC
ARCHITECTS
21 HOUGH ROAD BELMONT MA
02478 617-283-5299

9 WESTLUND ROAD
BELMONT MA

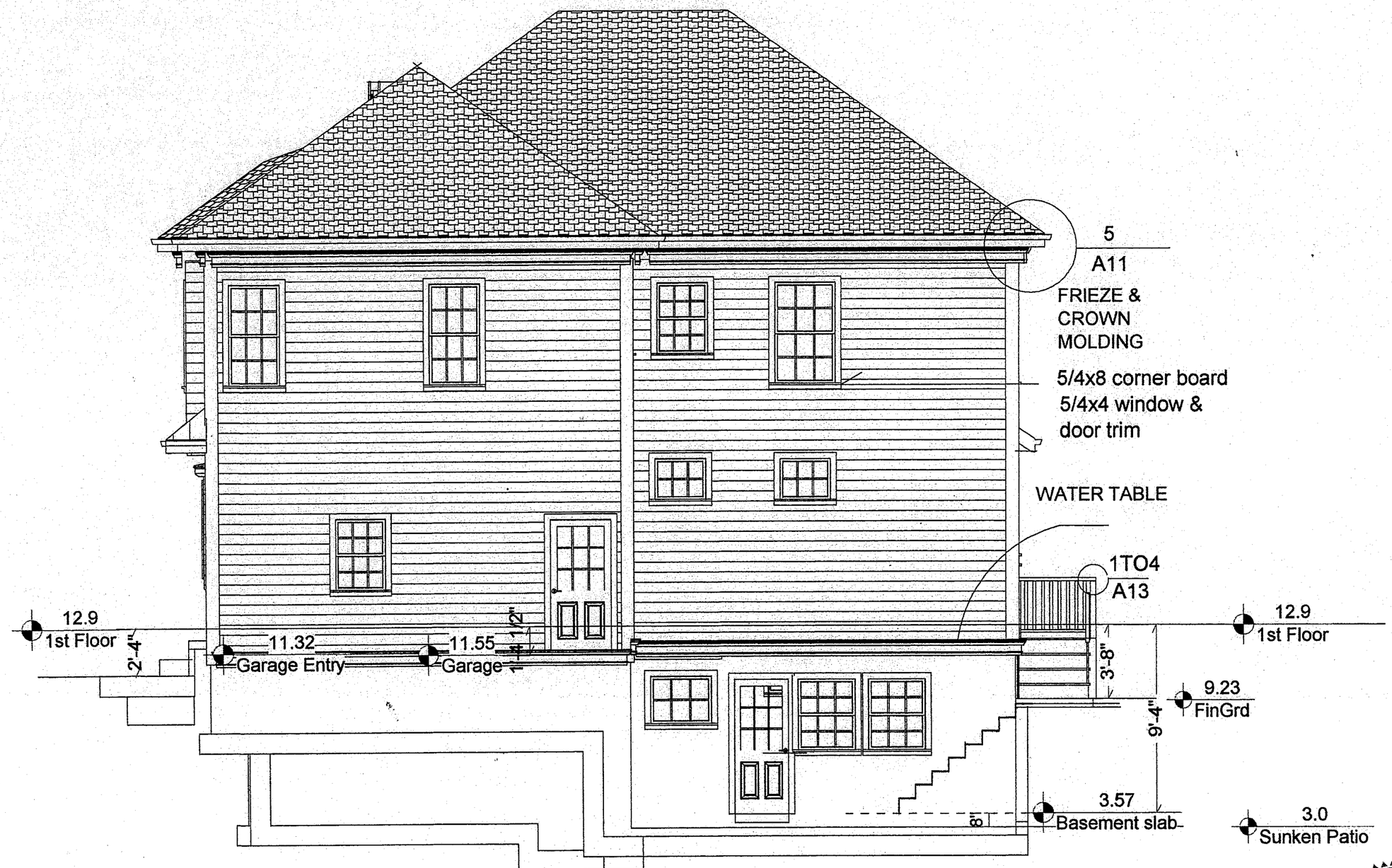

REGISTERED ARCHITECT
NORAYR KHERLOP
NO. 7493
BELMONT,
MASS.
COMMONWEALTH OF MASSACHUSETTS

A-6
9/15/15

EAST-SIDE ELEVATION
3/16"=1'0"

NORDESIGN & BUILD LLC
ARCHITECTS
21 HOUGH ROAD BELMONT MA
02478 617-283-5299

9 WESTLUND ROAD
BELMONT MA

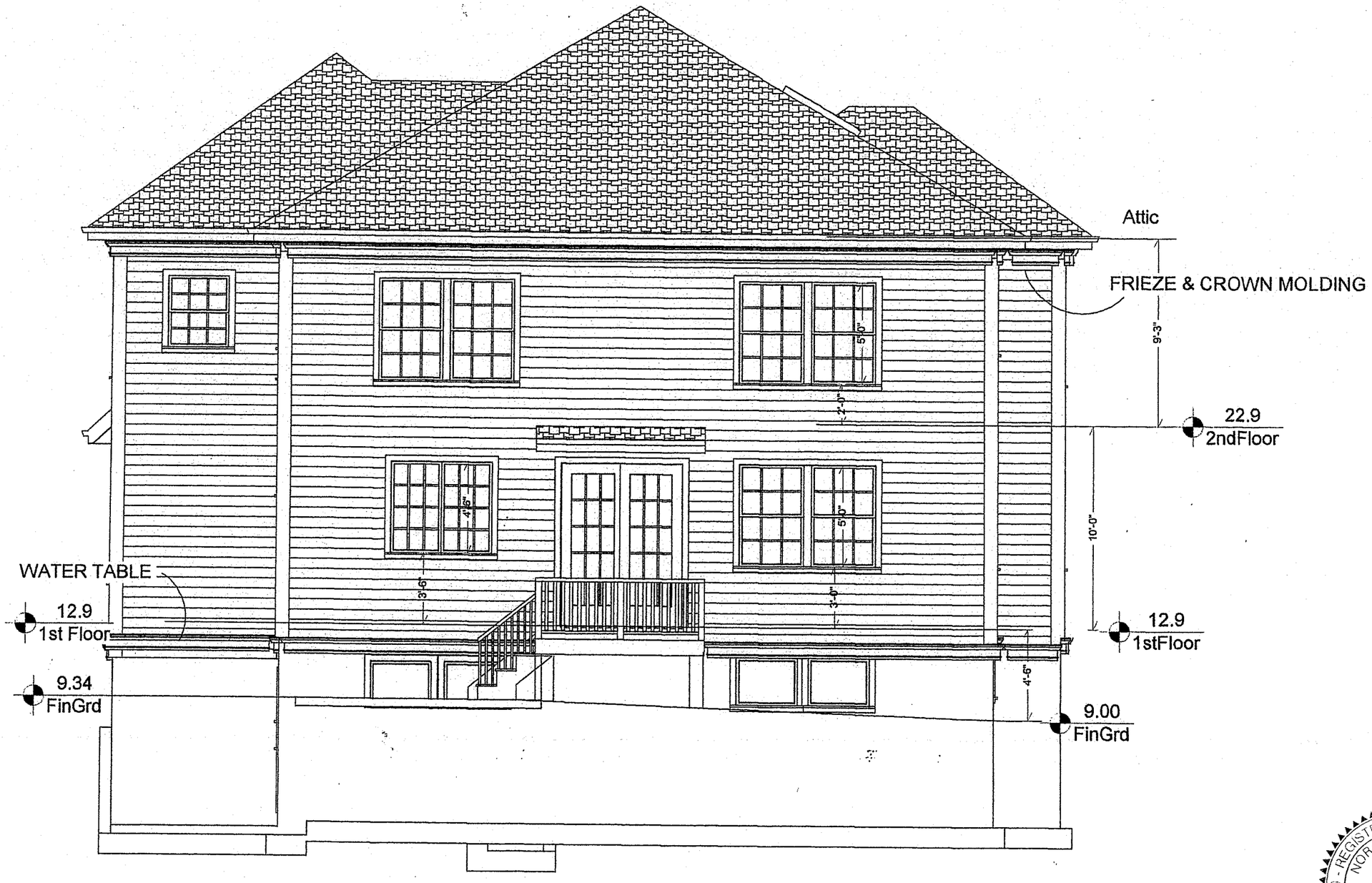

REGISTERED ARCHITECT
NORAYR KHERLOP
NO. 7493
BELMONT, MASS.
COMMONWEALTH OF MASSACHUSETTS

A-7
9/15/15

NORTH (REAR) ELEVATION
3/16"=1'-0"

NORDESIGN & BUILD LLC
ARCHITECTS
21 HOUGH ROAD BELMONT MA
02478 617-283-5299

9 WESTLUND ROAD
BELMONT MA

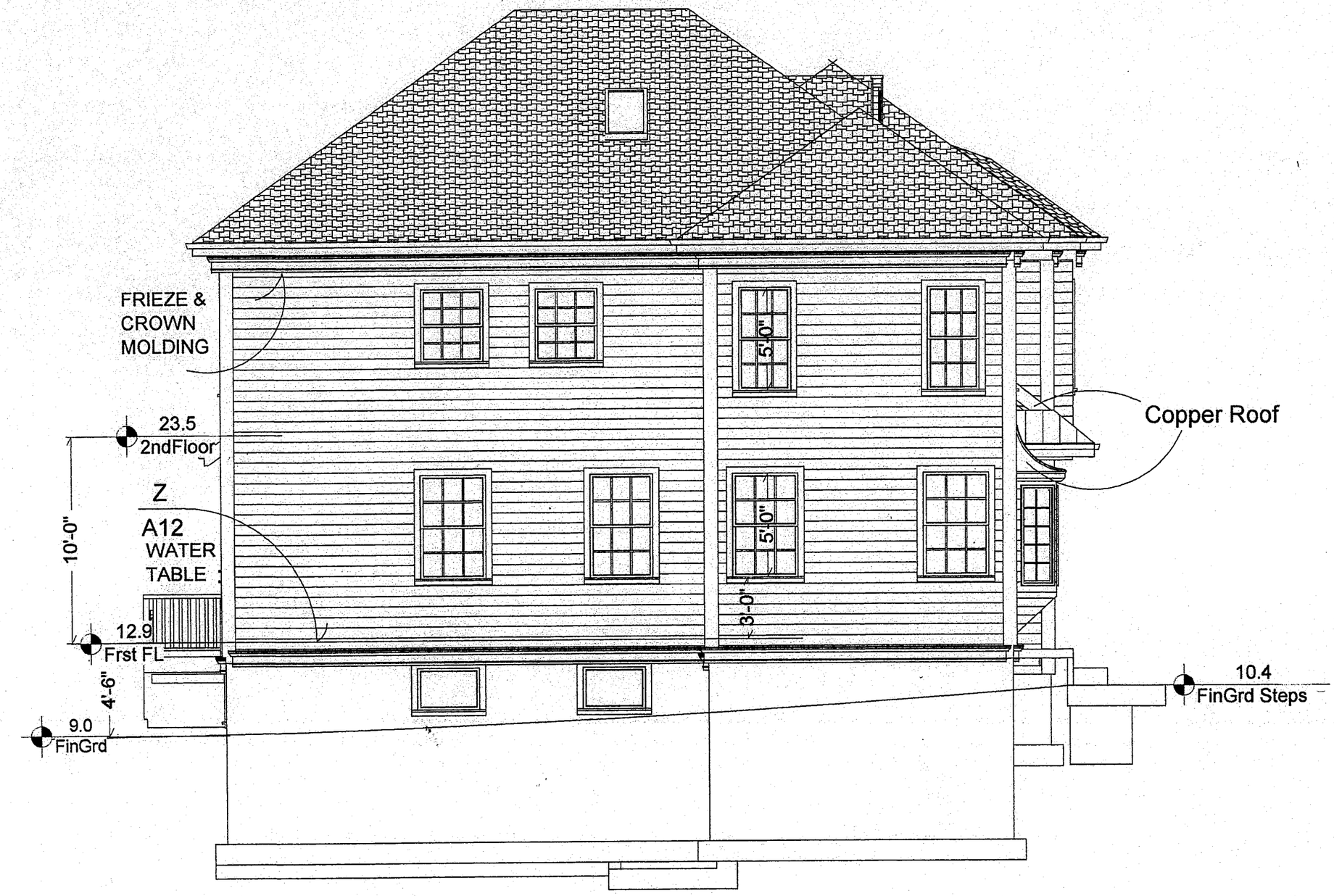

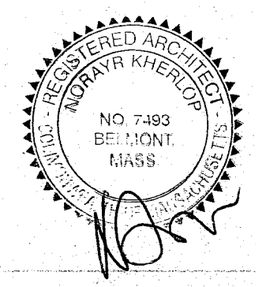

A-8

9/15/15

WEST SIDE
ELEVATION
3/16"=1'-0"

NORDESIGN & BUILD LLC
ARCHITECTS
21 HOUGH ROAD BELMONT MA
02478 617-283-5299

9 WESTLUND ROAD
BELMONT MA