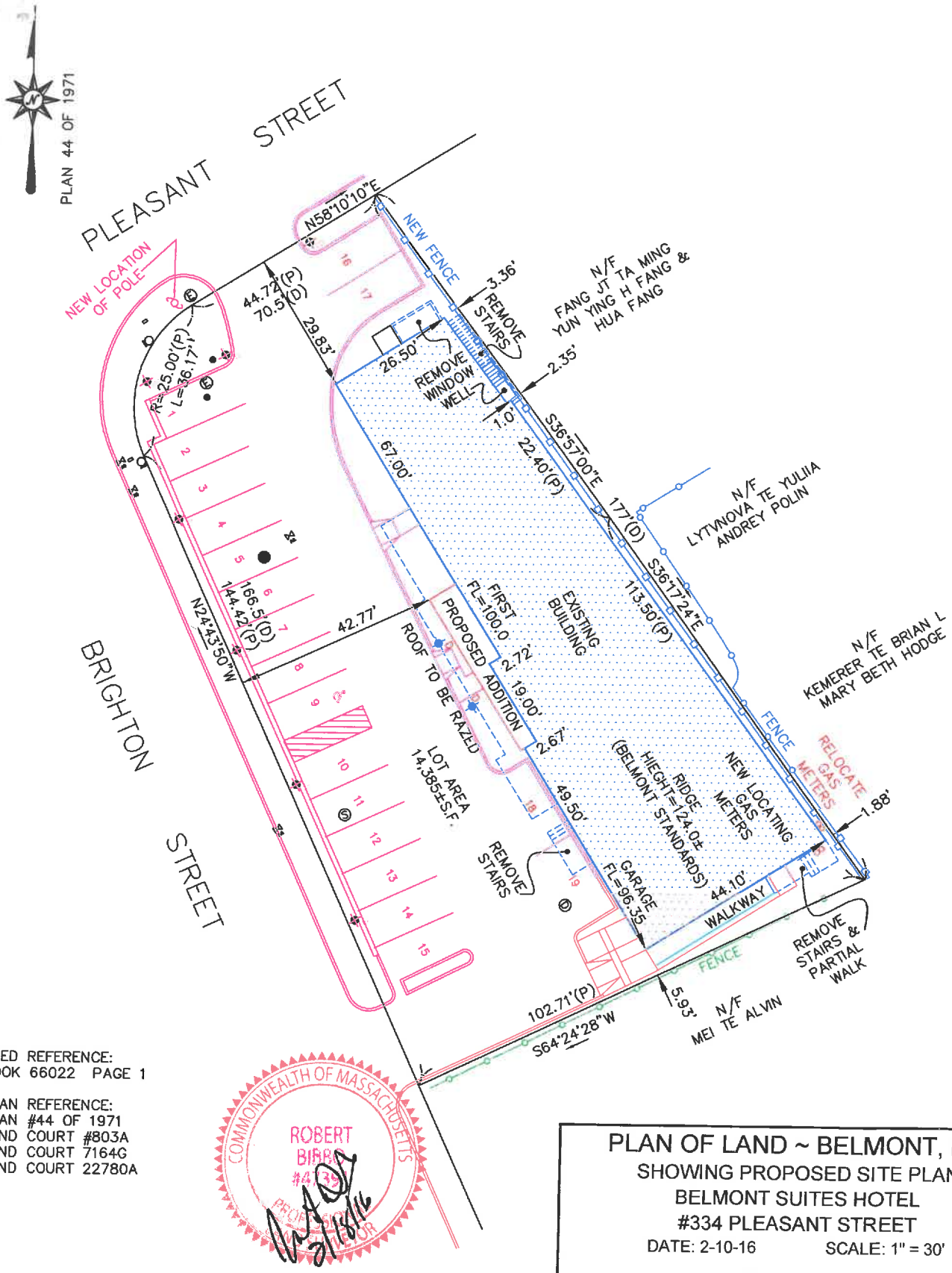

DEED REFERENCE:
BOOK 66022 PAGE 1

PLAN REFERENCE:
PLAN #44 OF 1971
LAND COURT #803A
LAND COURT 7164G
LAND COURT 22780A

COMMONWEALTH OF MASSACHUSETTS
ROBERT BIBBO
#4139
PROFESSIONAL LAND SURVEYOR
2/15/16

THE PROPERTY SHOWN ON THIS PLAN IS IN FLOOD ZONE "X". AND IS NOT IN A 100 YEAR FLOOD PLAIN AS DESIGNATED BY THE FLOOD INSURANCE RATE MAP #25017C0418E JUNE 4, 2010

PLAN OF LAND ~ BELMONT, MA

SHOWING PROPOSED SITE PLAN
BELMONT SUITES HOTEL
#334 PLEASANT STREET

DATE: 2-10-16 SCALE: 1" = 30'

PREPARED BY:
BIBBO BROTHERS AND ASSOCIATES
SURVEYING, ENGINEERING
& CONSTRUCTION CONSULTING
10 HAMMER STREET, WALTHAM, MA 02453
TEL: 781-891-0417 - E-MAIL: bibbobrothers@comcast.net
RALPH BIBBO, JR., MANAGER - ROBERT BIBBO, P.L.S.

Zoning Compliance Check List
(Registered Land Surveyor)

Property Address: 334 Pleasant St. Zone: LB111

Surveyor Signature and Stamp: Date: 2-10-16

COMMONWEALTH OF MASSACHUSETTS ROBERT BIBBO #47391 PROFESSIONAL LAND SURVEYOR

	REQUIRED	EXISTING	PROPOSED
Lot Area	N/A	14,385 ± S.F.	14,385 ± S.F.
Lot Frontage	20'	44.72'	44.72'
Floor Area Ratio	1.05	0.81	0.91
Lot Coverage	35 %	37%	34.58%
Open Space	N/A	63%	65.42%
Front Setback	10'	29.83'	29.83'
Side Setback	0'	1.88'	1.88'
Side Setback	—	—	—
Rear Setback	20'	5.93'	5.93'
Building Height	28'	27.7'	27.7'
Stories	2	2	2
½ Story Calculation			

NOTES:

March 27, 2006

Town of Belmont
Zoning Board of Appeals

APPLICATION FOR A SPECIAL PERMIT

Date: 12/30/15

Zoning Board of Appeals
Homer Municipal Building
19 Moore Street
Belmont, MA 02478

To Whom It May Concern:

Pursuant to the provisions of Massachusetts General Laws, Chapter 40A, Section 9, as amended, and the Zoning By-Laws of the Town of Belmont, I/we the undersigned, being the owner(s) of a certain parcel of land (with the buildings thereon) situated on 334 Pleasant Street hereby apply to your Board for a **SPECIAL PERMIT** for the erection or alteration on said premises or the use thereof under the applicable Section of the Zoning By-Law of said Town for **The conversion of this property for 'Lodging' as the principal use. The existing building and footprint shall remain, with minor revisions, and shall be renovated and updated to meet current building codes.**

on the ground that the same will be in harmony with the general purpose and intent of said Zoning By-Law.

Signature of Petitioner

Print Name Michael Colomba

Address 20 Felton St
Waltham MA 02453

Daytime Telephone Number (617) 448 - 2222

334 PLEASANT STREET, BELMONT MA - The Belmont Inn and Suites

NARRATIVE STATEMENT - TO THE ZONING BOARD OF APPEALS **12/30/15**

Town of Belmont
Zoning Board of Appeals
Attn: Mr. Ara Yogurtian

Dear Zoning Board Members:

I am respectfully requesting relief in the form of a Special Permit to allow that 'Lodging' be the principal use of this property. The existing building will be renovated and updated to comply with current building codes and standards and will be a benefit to the town and the neighborhood.

This commercial building sits on a 14,385 SF lot, has two stories, existing and proposed, and will have a total of approximately 11,796 usable SF (4,728 SF/First Floor; 4,580 SF/Second Floor; 2,488 SF/Basement). A small second floor addition, as depicted in the Proposed Drawings package, is proposed. This small addition would connect the two, now separate, sections of the second floor. I intend to add an elevator and make the entire building compliant with the Massachusetts Architectural Access Board requirements. A new fire suppression sprinkler system will also be added in addition to many other improvements.

The proposed luxury, boutique hotel, 'The Belmont,' will include 18 guest rooms, a café for the guests, a fitness room, a business center for guests, management office space, ancillary laundry and storage facilities, 19 parking spaces, and new lush landscaping. I would also be undertaking complete exterior renovations to make this building a veritable gem in this up-and-coming commercial area. The proposed exterior materials will be of a high quality and will preserve the New England character of the existing building, while updating all systems and features for the future. I hope that my renovations will inspire more improvements to nearby commercial properties. The transformation of this corner will also improve the property values for the entire neighborhood.

I have demonstrated, in my past hotel projects, my ability to improve properties successfully and respectfully while adding to the local tax base. This proposed use will generate room tax, sales tax, and meals tax, as well as, increased property taxes for the Town. The 'Lodging' use will not further overload Belmont's school system, and will generate less traffic and less need for parking than the prior, still allowed, use as a convenience store and general business. My hotels are quiet, respectful neighbors that will be a benefit to the abutting residential neighborhood and to this neighborhood business district.

My personal experience in owning and managing similar properties in Waltham Massachusetts and elsewhere, will assure that this property is skillfully managed by me and my on-site professionals - who all take great pride in our properties and businesses. The proposed improvements to the building and site would not only help to create a functional and aesthetic small hotel environment, but will also serve as a much needed redevelopment of this prominent corner. This is an important project and specific use that will benefit the entire town of Belmont and this neighborhood in particular. Thank you for your time and consideration.

Michael Colomba
Owner

CONLEY ASSOCIATES

Memorandum

To: Mr. Michael Colomba

From: Jennifer Conley, P.E., PTOE

Date: January 22, 2016

Re: Trip Generation, 334 Pleasant Street, Belmont, Massachusetts

---

Conley Associates, Inc. determined the net trip generation associated with the site located at 334 Pleasant Street in Belmont, Massachusetts. The 10,900 square foot building has 2,900 square feet of office space and 8,000 square feet of retail space. The first floor was previously occupied by a variety store, a tailor, and a sign company and the second floor housed attorney's offices and a dental molds manufacturer.

The existing trip generation calculations were based on the Institute of Transportation Engineer's (ITE) manual, Trip Generation, 9th Edition, an industry standard. Land Use Codes (LUC) 710, General Office Building; LUC 814 Variety Store; and LUC 826, Specialty Retail were used to calculate the weekday daily, weekday AM peak hour, and weekday PM peak hour trip generation.

Based on ITE, the existing site would have generated 438 vehicle trips over the course of a weekday (219 trips in and 219 trips out), 19 vehicle trips during the weekday AM peak hour (11 trips in and 8 trips out), and 37 vehicle trips during the weekday PM peak hour (16 trips in and 21 trips out).

40 Warren St #346, 3rd Floor, Boston, MA 02129 (617) 742-5111
349 Lakewood Drive, Killington, VT 05751 (802) 345-2321
www.ConleyAssociates.com

Table 1: Existing Trip Generation

Time Period		General Office[1]	Variety Store[2]	Specialty Retail[3]	Total
Weekday Daily	In	16	85	118	219
	Out	16	85	118	219
	Total	32	170	236	438
Weekday AM Peak Hour	In	4	5	2	11
	Out	1	5	2	8
	Total	5	10	4	19
Weekday PM Peak Hour	In	1	9	6	16
	Out	4	9	8	21
	Total	5	18	14	37

1. Trip generation based on Trip Generation Manual, 9th Edition, published by Institute of Transportation Engineers, 2012. Assumes 2,900 square feet of Land Use Code 710, General Office Building.
2. Trip generation based on Trip Generation Manual, 9th Edition, published by Institute of Transportation Engineers, 2012. Assumes 2,667 square feet of Land Use Code 814, Variety Store (one third of the retail space).
3. Trip generation based on Trip Generation Manual, 9th Edition, published by Institute of Transportation Engineers, 2012. Assumes 5,333 square feet of Land Use Code 826, Specialty Retail.

Conley Associates, Inc. then determined the trip generation of the proposed 18 room boutique hotel and compared it to the existing trip generation. The trip characteristics of a boutique hotel most closely resemble ITE Land Use Code 310, Hotel. With all 18 rooms occupied, the boutique hotel is anticipated to generate 160 vehicle trips over the course of a weekday (80 trips in and 80 trips out), 12 vehicle trips during the weekday AM peak hour (7 trips in and 5 trips out), and 12 vehicle trips during the weekday PM peak hour (6 trips in and 6 trips out). As shown in Table 2, it is expected that the boutique hotel will generate fewer trips than the previous site uses.

Table 2: Existing versus Proposed Trip Generation

Time Period		Existing Trips	Proposed Boutique	Net Trips
Weekday Daily	In	219	80	-139
	Out	219	80	-139
	Total	438	160	-278
Weekday AM Peak Hour	In	11	7	-4
	Out	8	5	-3
	Total	19	12	-7
Weekday PM Peak Hour	In	16	6	-10
	Out	21	6	-15
	Total	37	12	-25

1. Trip generation based on Trip Generation Manual, 9th Edition, published by Institute of Transportation Engineers, 2012. Assumes 18 rooms of Land Use Code 310, Hotel.

As shown, it is expected that the proposed boutique hotel to be located at 334 Pleasant Street in Belmont, Massachusetts is expected to generate significantly fewer trips than the previous site uses. Conley Associates, Inc. determined the proposed hotel would generate 7 fewer vehicle trips during the weekday AM peak hour and 25 fewer vehicle trips during the weekday PM peak hour.

TRIP GENERATION WORKSHEET

x= 2.900 1000 Sq Ft

LUC: General Office Building (710)

WEEKDAY

Average Rate = 11.03
Total Trips = 31.987

Fitted Curve Equation = Ln (T) = 0.76* Ln(X) +3.68
Total Trips = 89.05

AM PEAK HOUR

Average Rate = 1.56
Total Trips = 4.524
88% of Trips In = 4
12% of Trips Out = 1

Fitted Curve Equation = Ln (T) = 0.80* Ln(X) +1.57
Total Trips = 11.27
88% of Trips In = 10
12% of Trips Out = 1

PM PEAK HOUR

Average Rate = 1.49
Total Trips = 4.321
17% of Trips In = 1
83% of Trips Out = 4

Fitted Curve Equation = T = 1.12* (X) +78.45
Total Trips = 81.70
17% of Trips In = 14
83% of Trips Out = 68

SATURDAY

Average Rate = 2.46
Total Trips = 7.134

Fitted Curve Equation = T = 2.03* (X) +31.75
Total Trips = 37.64

PEAK HOUR of GENERATOR

Average Rate = 0.43
Total Trips = 1.247
54% of Trips In = 1
46% of Trips Out = 1

SUNDAY

Average Rate = 1.05
Total Trips = 3.045

PEAK HOUR of GENERATOR

Average Rate = 0.16
Total Trips = 0.464
58% of Trips In = 0
42% of Trips Out = 0

ITE TRIP GENERATION
9TH EDITION

CONLEY
ASSOCIATES

TRIP GENERATION WORKSHEET

x= 2.667 1000 SF LUC: Variety Store (814)

WEEKDAY

Average Rate =	64.03	Fitted Curve Equation = Not Given
Total Trips =	170.768	

AM PEAK HOUR of ADJACENT STREET

Average Rate =	3.81	Fitted Curve Equation = Not Given
Total Trips =	10.16127	
50% of Trips In =	5	
50% of Trips Out =	5	

PM PEAK HOUR of ADJACENT STREET

Average Rate =	6.82	Fitted Curve Equation = Not Given
Total Trips =	18.18894	
50% of Trips In =	9	
50% of Trips Out =	9	

AM PEAK HOUR of GENERATOR

Average Rate =	3.81	Fitted Curve Equation = Not Given
Total Trips =	10.16127	
50% of Trips In =	5	
50% of Trips Out =	5	

PM PEAK HOUR of GENERATOR

Average Rate =	6.99	Fitted Curve Equation = Not Given
Total Trips =	18.64233	
17% of Trips In =	3	
83% of Trips Out =	15	

SATURDAY

Average Rate =		Fitted Curve Equation = Not Given
Total Trips =	0	

PEAK HOUR of GENERATOR

Average Rate =		Fitted Curve Equation = Not Given
Total Trips =	0	
17% of Trips In =	0	
83% of Trips Out =	0	

SUNDAY

Average Rate =		Fitted Curve Equation = Not Given
Total Trips =	0	

PEAK HOUR of GENERATOR

Average Rate =		Fitted Curve Equation = Not Given
Total Trips =	0	
17% of Trips In =	0	
83% of Trips Out =	0	

ITE TRIP GENERATION
9TH EDITION

CONLEY ASSOCIATES

TRIP GENERATION WORKSHEET

x= 5.333 1000 SF

LUC: Specialty Retail Center (826)

WEEKDAY

Average Rate =	44.32	Fitted Curve Equation =	T = 42.87X +37.66
Total Trips =	236.3586	Total Trips =	266.29

AM PEAK HOUR of ADJACENT STREET[1]

Average Rate =	0.70	Fitted Curve Equation =	Not Given
Total Trips =	4	Total Trips =	
61% of Trips In =	2	61% of Trips In =	
39% of Trips Out =	2	39% of Trips Out =	

PM PEAK HOUR of ADJACENT STREET

Average Rate =	2.71	Fitted Curve Equation =	T = 2.40X + 21.48
Total Trips =	14.45243	Total Trips =	34.28
44% of Trips In =	6	44% of Trips In =	15
56% of Trips Out =	8	56% of Trips Out =	19

SATURDAY

Average Rate =	42.04	Fitted Curve Equation =	Not Given
Total Trips =	224.1993		

SATURDAY PEAK HOUR of GENERATOR[2]

Average Rate =	3.52	Fitted Curve Equation =	Not Given
Total Trips =	18.77216	Total Trips =	
52% of Trips In =	10	52% of Trips In =	
48% of Trips Out =	9	48% of Trips Out =	

LUC: Shopping Center (820)

AM PEAK HOUR of ADJACENT STREET

Average Rate =	0.96	Fitted Curve Equation =	Ln (T) = 0.61* Ln(X) +2.24
Total Trips =	5.11968	Total Trips =	26.08
62% of Trips In =	3	62% of Trips In =	16
38% of Trips Out =	2	38% of Trips Out =	10

PM PEAK HOUR of ADJACENT STREET

Average Rate =	3.71	Fitted Curve Equation =	Ln (T) = 0.67* Ln(X) +3.31
Total Trips =	19.78543	Total Trips =	84.06
48% of Trips In =	9	48% of Trips In =	40
52% of Trips Out =	10	52% of Trips Out =	44

SATURDAY PEAK HOUR of GENERATOR

Average Rate =	4.82	Fitted Curve Equation =	Ln (T) = 0.65* Ln(X) +3.78
Total Trips =	25.70506	Total Trips =	130.07
52% of Trips In =	13	52% of Trips In =	68
48% of Trips Out =	12	48% of Trips Out =	62

ITE TRIP GENERATION
9TH EDITION

CONLEY ASSOCIATES

[1] AM PEAK HOUR of ADJACENT STREET determined through ratio of Shopping Center (LUC 820) AM peak hour of adjacent street and PM peak hour of adjacent street. (0.96/3.71)*2.71 =.701

[2] Sat. PEAK HOUR of GENERATOR determined through ratio of Shopping Center (LUC 820) Sat. peak hour of generator and PM peak hour of adjacent street. (4.82/3.71)*2.71 =3.552

TRIP GENERATION WORKSHEET

x= 18 Occupied Rooms LUC: Hotel (310)

WEEKDAY

Average Rate = 8.92
Total Trips = 160.56

Fitted Curve Equation = Not Given

AM PEAK HOUR of ADJACENT STREET

Average Rate = 0.67
Total Trips = 12.06
58% of Trips In = 7
42% of Trips Out = 5

Fitted Curve Equation = T = 0.78(X) -29.80
Total Trips = -15.76
58% of Trips In = -9
42% of Trips Out = -7

PM PEAK HOUR of ADJACENT STREET

Average Rate = 0.70
Total Trips = 12.6
49% of Trips In = 6
51% of Trips Out = 6

Fitted Curve Equation = Not Given

AM PEAK HOUR of GENERATOR

Average Rate = 0.64
Total Trips = 11.52
55% of Trips In = 6
45% of Trips Out = 5

Fitted Curve Equation = Ln (T) = 0.91* Ln(X) + 0.01
Total Trips = 14.02
55% of Trips In = 8
45% of Trips Out = 6

PM PEAK HOUR of GENERATOR

Average Rate = 0.74
Total Trips = 13.32
57% of Trips In = 8
43% of Trips Out = 6

Fitted Curve Equation = Ln (T) = 0.940* Ln(X) - 0.03
Total Trips = 14.69
57% of Trips In = 8
43% of Trips Out = 6

SATURDAY

Average Rate = 10.50
Total Trips = 189

Fitted Curve Equation = Not Given

PEAK HOUR of GENERATOR

Average Rate = 0.87
Total Trips = 15.66

Fitted Curve Equation = Not Given

SUNDAY

Average Rate = 8.48
Total Trips = 152.64

Fitted Curve Equation = Not Given

PEAK HOUR of GENERATOR

Average Rate = 0.75
Total Trips = 13.50

Fitted Curve Equation = Not Given

ITE TRIP GENERATION
9TH EDITION

CONLEY
ASSOCIATES

MEA Engineering Associates, Inc.
20 Felton Street
Waltham, MA 02453
781 894-6730 office
781 647-3542 fax
mucc96@aol.com

February 22, 2016

Mr. Andres Rojas.

Rojas Design, Inc.
1500 Soldiers Field Road
Brighton, MA 02135-1105

Re: Information Required by Zoning Board – 334 Pleasant Street, Belmont, MA

Dear Mr. Rojas,

MEA Engineering Associates, Inc. is providing the following clarifications to our February 15, 2016 letter in response to requests for information from the town zoning board.

1. Sound levels from HVAC equipment can be compared to the following typical sound levels. See attached table.

2. Exterior lighting foot candle levels are in accordance with industry standards for exterior parking and site lighting levels. Based upon proposed fixture selection light spillover from the property will not exceed standards established by the Town.

Please forward this information to all involved parties.

If you have any questions or comments, kindly contact our office.

Sincerely yours,

M.E.A. ENGINEERING ASSOCIATES, INC.

Alfred E. Muccini, P.E.
President

Noise Source	Decibel Level	Decibel Effect
Jet take-off (at 25 meters)	150	Eardrum rupture
Aircraft carrier deck	140	
Military jet aircraft take-off from aircraft carrier with afterburner at 50 ft (130 dB).	130	
Thunderclap, chain saw. Oxygen torch (121 dB).	120	Painful. 32 times as loud as 70 dB.
Steel mill, auto horn at 1 meter. Turbo-fan aircraft at takeoff power at 200 ft (118 dB). Riveting machine (110 dB); live rock music (108 - 114 dB).	110	Average human pain threshold. 16 times as loud as 70 dB.
Jet take-off (at 305 meters), use of outboard motor, power lawn mower, motorcycle, farm tractor, jackhammer, garbage truck. Boeing 707 or DC-8 aircraft at one nautical mile (6080 ft) before landing (106 dB); jet flyover at 1000 feet (103 dB); Bell J-2A helicopter at 100 ft (100 dB).	100	8 times as loud as 70 dB. Serious damage possible in 8 hr exposure.
Boeing 737 or DC-9 aircraft at one nautical mile (6080 ft) before landing (97 dB); power mower (96 dB); motorcycle at 25 ft (90 dB). Newspaper press (97 dB).	90	4 times as loud as 70 dB. Likely damage in 8 hour exposure.
Garbage disposal, dishwasher, average factory, freight train (at 15 meters). Car wash at 20 ft (89 dB); propeller plane flyover at 1000 ft (88 dB); diesel truck 40 mph at 50 ft (84 dB), diesel train at 45 mph at 100 ft (83 dB). Food blender (88 dB); milling machine (85 dB); garbage disposal (80 dB).	80	2 times as loud as 70 dB. Possible damage in 8 hour exposure.
Passenger car at 65 mph at 25 ft (77 dB); freeway at 50 ft from pavement edge 10 a.m. (76 dB). Living room music (76 dB); radio or TV-audio, vacuum cleaner (70 dB).	70	Arbitrary base of comparison. Upper 70s are annoyingly loud to some people.
Conversation in restaurant, office, background music. Air conditioning unit at 100 feet.	60	Half as loud as 70 dB. Fairly quiet.
Quiet suburb, conversation at home. Large electrical transformers at 100 feet.	50	One-fourth as loud as 70 dB.

Noise Source	Decibel Level	Decibel Effect
Library, bird calls (44 dB); lowest limit of urban ambient sound	40	One-eighth as loud as 70 dB.
Quiet rural area.	30	One-sixteenth as loud as 70 dB. Very Quiet.
Whisper, rustling leaves	20	
Breathing	10	Barely audible

Heating & Air Conditioning
Amana

PTAC Air Conditioners and Heat Pumps

Product Specifications

11.7 EER / 3.4 COP

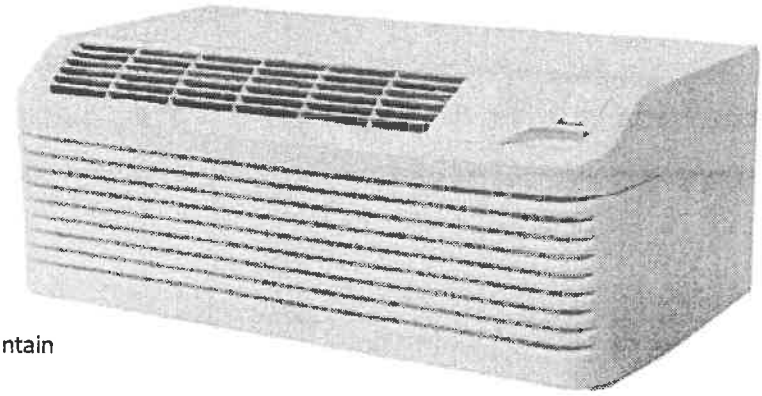

Product Features

- Quiet operation: STC of 28
- Assembled in the USA for 30 years
- Increased dehumidification capacity
- 100% run-tested at our plant in Fayetteville, TN, for leaks
- 7⅝" unit front depth: one of the shallowest silhouettes in the industry today
- Removable condenser shroud allows easy access to enable regular cleaning of coils
- Easy pull-out filters that are washable and easy to maintain
- Filter drier for sealed system refrigerant
- 7-Button touch pad provides complete control to guests for in-room comfort while maintaining energy efficiency
- Condensate dispersion system removes condensate from indoor cooling operation and evaporates it into the atmosphere through the condenser
- Digismart™ front desk control & energy management software
- Room freeze protection is activated when the unit senses temperatures of 40°F or below
- Versatile style that blends into any room's color scheme and decor
- Easy to service with on-board led diagnostics
- Digismart™ wireless remote thermostat is available
- Remote temperature sensing for guest climate control
- Extended heat pump heating down to as low as 24°F outdoor ambient temperature
- Zero floor clearance allows unit to be installed flush to a finished floor
- 30-second fan-off delay
- Compressor lock-in prevents compressor short-cycling
- Constant fan mode
- Hidden ventilation control
- High-pressure switch

DigiSmart CONTROL BOARD

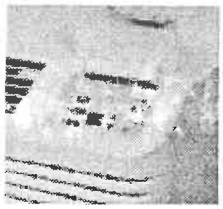

PROUDLY ASSEMBLED FOR OVER 30 YEARS Amana IN THE U.S.A.

PARTS LIMITED WARRANTY* UNIT LIMITED WARRANTY* R-410A ARI CERTIFIED ARI CERTIFIED ETL

First-Year Warranty: Parts & Labor
Second through Fifth Year: Parts & Labor on certain sealed system components
Second through Fifth Year: on certain functional parts only
* Complete warranty details available at www.amana-ptac.com.

Amana® is a trademark of Maytag Corporation or its related companies and used under license to Goodman Company, L.P., Houston, Texas.

NOMENCLATURE

PTC	07	3	G	35	AXXX	AA
1,2,3	4,5	6	7	8,9	10,11,12,13	14,15

Basic Model Type

PTC	Standard Cooler PTAC
PTH	Standard Heat Pump PTHP
DRY	Dehumid Cooler PTAC

Cooling Capacity

07	7,000 BTU/h	60 Hz
09	9,000 BTU/h	60 Hz
10	10,000 BTU/h	50 Hz
12	12,000 BTU/h	50 or 60 Hz
15	15,000 BTU/h	60 Hz
17	17,000 BTU/h	60 Hz

Rated Voltage

2	115V, 60 Hz, 1 Ph
3	230/208V, 60 Hz, 1 Ph
4	265V, 60 Hz, 1 Ph
5	240/220V, 50 Hz, 1 Ph

Design Series

G	R-410A

Heater Size

00	No Electric Heat	35	3.5 kW (230/208V)
15	1.5 kW		3.7 kW (265V)
25	2.5 kW	50	5.0 kW

Engineering

Major & Minor Revisions

Features Code

A	Standard Model
C	Corrosion Protection (Seacoast)
D	Power Door
F	Fuse Holder (230/208 Only)
H	Hydronic Heat-Capable
P	Condensate Pump (PTH Only)
Q	Quiet STC 31 Chassis
R	RF Antenna
V	Power Vent
X	placeholder
W	Hard-Wired (PTQC)

Use up to 4 as needed in alphabetical order

Examples:

PTC123*50AXXX PTC073*35CRXX

PTC123*50CXXX PTC073*25CQRW

PRODUCT SPECIFICATIONS: PTC MODELS — COOLING/ELECTRIC HEAT

230/208 VOLTS

MODEL [6, 8, 9]		PTC 073G***XXX	PTC 093G***XXX	PTC 123G***XXX	PTC 153G***XXX	PTC 173G***XXX
Voltage [3]		230 / 208	230 / 208	230 / 208	230 / 208	230 / 208
Capacity (BTU/h)		7,700	9,000	11,700 / 11,500	15,000 / 14,700	16400 / 16200
Amps [10]		3.5	4.1	5.6	7.0	8.4
Watts [10]		670/660	805/785	1135/1105	1500/1470	1740/1720
EER		11.5/11.7	11.2/11.5	10.3/10.4	10.0/10.0	9.4
UNIT WITHOUT ELECTRIC HEATER						
Min. Circuit Amps [2, 4, 10]		4.2	4.9	6.8	8.5	10.2
CFM (Cool/Wet Coil)	High	290	290	290	340	340
	Low	264	264	264	314	314
CFM (Dry Coil)	High	310	310	310	360	360
	Low	282	282	282	332	332
Ventilated Air, CFM (Fan Only)*		65*	65*	65*	65*	65*
Dehumidification (Pints/Hr.)		1.7	2.2	3.6	4.4	4.8
Net Weight (lbs.)		98	102	102	113	113
Ship Weight (lbs.)		113	117	119	130	130

265/277 VOLTS

Model [1, 6, 8]		PTC 074G***XXX	PTC 094G***XXX	PTC 124G***XXX	PTC 154G***XXX
Voltage [1, 3]		265	265	265	265
Capacity (BTU/h)		7,700	9,000	12,000	14,800
Amps [10]		3.0	3.6	4.8	6.0
Watts [10]		670	795	1,165	1,480
EER		11.5	11.3	10.3	10.0
UNIT WITHOUT ELECTRIC HEATER					
Min. Circuit Amps [2, 4, 10]		3.6	4.4	5.9	7.4
CFM (Cool/Wet Coil)	High	290	290	290	340
	Low	264	264	264	314
CFM (Dry Coil)	High	310	310	310	360
	Low	282	282	282	332
Ventilated Air, CFM (Fan Only)*		65*	65*	65*	65*
Dehumidification (Pints/Hr.)		1.7	2.2	3.6	4.4
Net Weight (lbs.)		98	102	102	113
Ship Weight (lbs.)		113	117	119	130

* Actual vent CFM performance will vary due to application and installation conditions.

NOTES

1. All 265-volt models must use an Amana® brand sub-base (PTSB4**E) or an Amana® brand hard-wire kit PTPWHWK4 and disconnect switch PSHW04A.
2. Minimum Circuit Ampacity (MCA) ratings conform to the National Electric Code; however, local codes should apply.
3. Minimum voltage on 230/208-volt models is 197 volts; maximum is 253 volts. Minimum voltage on 265-volt models is 239 volts; maximum is 292 volts.
4. Overcurrent protection for all units without electric heaters is 15 amps. Overcurrent protection on 265-volt models must be cartridge-style time-delay fuses (included and factory-installed on all Amana® brand 265-volt chassis). See heater performance
5. Heating capacity and efficiency based on unit operation without condensate pump; unit automatically switches to electric heat at approximately 24°F outdoor ambient.
6. Specify two-digit heater kW size to complete model number.
7. R-410A refrigerant used in all systems.
8. All units meet or exceed ASHRAE 90.1 standards.
9. All units less than 250 volts have a Leak Current Detector Interrupter (LCDI) power cord and meet UL 484 standards.
10. Refer to electric heat performance data for total MCA and recommended overcurrent protection. Amps and Watts notation refers to compressor only.

PRODUCT SPECIFICATIONS: PTH MODELS — COOLING/HEAT PUMP/ELECTRIC HEAT

MODEL [1, 6, 8, 9]		PTH073G **AXXX	PTH093G **AXXX	PTH123G **AXXX	PTH153G **AXXX	PTH074G **AXXX	PTH094G **AXXX	PTH124G **AXXX	PTH154G **AXXX
Voltage [1, 3]		230 / 208	230 / 208	230 / 208	230 / 208	265	265	265	265
Capacity (BTU/h)		7,700	9,000	12,000	14,400	7,700	9,100	12,000	14,400
Amps [10]		3.9	4.2	5.8	7.0	3.1	3.7	5.0	6.1
Watts [10]		650 / 650	785 / 785	1,120 / 1,120	1,480 / 1,480	650	790	1,120	1,480
EER		11.7 / 11.7	11.5 / 11.5	10.7 / 10.7	9.7 / 9.7	11.7	11.5	10.7	9.7
UNIT WITHOUT ELECTRIC HEATER									
Min. Circuit Amps [2, 4, 10]		4.7	5.1	7.1	8.5	3.8	4.5	6.1	7.4
CFM (Cool/Wet Coil)	High	340	330	340	390	340	330	340	390
	Low	245	245	245	340	245	245	245	340
CFM (Dry Coil)	High	370	360	370	410	370	360	370	410
	Low	270	270	270	370	270	270	270	370
Ventilated Air, CFM (Fan Only)*		65*	65*	65*	65*	65*	65*	65*	65*
Dehumidification (Pints/Hr.)		1.7	2.2	3.6	4.4	1.7	2.2	3.6	4.4
Net Weight (lbs.)		108	112	115	126	108	112	115	125
Ship Weight (lbs.)		123	127	132	143	123	127	132	142

* Actual vent CFM performance will vary due to application and installation conditions.

NOTES

1. All 265-volt models must use an Amana® brand sub-base (PTSB4**E) or an Amana® brand hard-wire kit (PTPWHWK4).
2. Minimum Circuit Ampacity (MCA) ratings conform to the National Electric Code; however, local codes should apply. Minimum voltage on 230/208-volt models is 197 volts; maximum is 253 volts.
3. Minimum voltage on 265-volt models is 239 volts; maximum is 292 volts.
4. Overcurrent protection for all units without electric heaters is 15 amps. Overcurrent protection on 265-volt models must be cartridge-style time-delay fuses (included and factory-installed on all Amana® brand 265-volt chassis).
5. Heating capacity and efficiency based on unit operation without condensate pump; unit automatically switches to electric heat at approximately 24°F outdoor ambient.
6. Specify two-digit heater kW size to complete model number.
7. R-410A refrigerant used in all systems.
8. All units meet or exceed ASHRAE 90.1 standards.
9. All units less than 250 volts have a Leak Current Detector Interrupter (LCDI) power cord and meet UL 484 standards.
10. Refer to electric heat performance data for total MCA and recommended overcurrent protection. Amps and Watts notation refers to compressor only.

PRODUCT SPECIFICATIONS: PTC MODELS — COOLING (UNITS FOR HYDRONIC HEATING)

MODEL [5, 6]		PTC 072G00XXX	PTC 092G00XXX
Voltage 2		115	115
Capacity (BTU/h)		7000	9000
Amps		6.9	8.3
Watts		585	795
EER		11.9	11.3
Min. Circuit Amps 1, 3		8.3	10.1
CFM (Cool/Wet Coil)	High	290	290
	Low	264	264
CFM (Dry Coil)	High	310	310
	Low	282	282
Ventilated Air, (Fan Only)*		65*	65*
Dehumidification (Pints/Hr.)		1.7	2.3
Net Weight (lbs.)		98	102
Ship Weight (lbs.)		113	117

* Actual vent CFM performance will vary due to application and installation conditions.

NOTES

1 Minimum Circuit Ampacity (MCA) ratings conform to the National Electric Code; however, local codes should apply.
2 Minimum voltage on 115-volt models is 109 volts; maximum is 127 volts.
3 Overcurrent protection for all units without electric heaters is 15 amps.
4 R-410A refrigerant used in all systems.
5 All units meet or exceed ASHRAE 90.1 standards.
6 All units less than 250 volts have a Leak Current Detector Interrupter (LCDI) power cord and meet UL 484 standards.

PRODUCT SPECIFICATIONS: PTC / PTH MODELS — ELECTRIC HEAT PERFORMANCE

(Primary Heating for PTC Models; Auxiliary Heating for PTH Models; See below for Power Cord Configuration)

VOLTAGE	ELECTRIC HEATER SIZE (KW)	NO. OF STAGES	NOMINAL HEATING (BTU/H)			TOTAL WATTS [6]	TOTAL AMPS	MIN. CIRCUIT AMPACITY[2]	MOD [4] (AMPS)	POWER CORD
			@ 230V	@ 208V	@ 265V					
230/208V	2.5	1	8,500	6,800	- -	2,570 / 2,115	11.2 / 10.1	14.1	15	6-15 P
230/208V	3.5	1	12,000	9,900	- -	3,570 / 2,935	15.5 / 14.1	19.5	20	6-20 P
230/208V	5	1	17,100	14,000	- -	5,070 / 4,160	22.1 / 20.0	27.6	30	6-30 P
265V	2.5	1	- -	- -	8,500	2,570	9.7	12.2	15	7-20 P
265V	3.7	1	- -	- -	12,600	3,770	14.2	17.9	20	7-20 P
265V	5	1	- -	- -	17,100	5,070	19.2	23.9	25	7-30 P

NOTES

1 All 265-volt models must use an Amana® brand sub-base (PTSB4**E) or an Amana® brand hard-wire kit (PTPWHWK4).
2 Minimum branch circuit ampacity ratings conform to the National Electric Code; however, local codes should apply.
3 Minimum voltage on 230/208-volt models is 197 volts; maximum is 253 volts. Minimum voltage on 265-volt models is 239 volts; maximum is 292 volts.
4 Overcurrent protection for all units without electric heaters is 15 amps. Overcurrent protection on 265-volt models must be cartridge-style time-delay fuses (included and factory-installed on all Amana® brand 265-volt chassis).
5 Heating capacity and efficiency based on unit operation without condensate pump; unit automatically switches to electric heat at approximately 24°F outdoor ambient.
6 Total watts for 15,000 BTU/h models; subtract 20 watts for PT07/09/12
7 Specify two-digit heater kW size to complete model number.
8 R-410A refrigerant used in all systems.
9 All units meet or exceed ASHRAE 90.1 standards.
10 All units less than 250 volts have a Leak Current Detector Interrupter (LCDI) power cord and meet UL 484 standards.

PRODUCT SPECIFICATIONS: PTH MODELS — REVERSE-CYCLE HEATING PERFORMANCE

HEATING CAPACITY[1]	PTH073G **AXXX	PTH093G **AXXX	PTH123G **AXXX	PTH153G **AXXX	PTH074G **AXXX	PTH094G **AXXX	PTH124G **AXXX	PTH154G **AXXX
Voltage [1, 3]	230 / 208	230 / 208	230 / 208	230 / 208	265	265	265	265
BTU/h [5]	6,800 / 6,800	8,300 / 8,100	11,500 / 11,300	13,800 / 13,600	6,800	8,300	11,400	13,700
Amps [10]	3.9	4.2 / 4.2	5.8 / 5.8	7.0 / 7.0	3.1	3.7	5.0	6.1
Watts [10]	585 / 570	715 / 700	1085 /1035	1350 / 1330	570	715	1080	1340
COP [5]	3.4 / 3.5	3.4 / 3.4	3.1 / 3.2	3.0 / 3.0	3.5	3.4	3.1	3.0
CFM (Dry)	370	360	370	410	370	360	370	410

COP = Coefficiency of Performance; per AHRI Test Procedures, units are rated for capacities and efficiencies.

NOTES

1. All 265-volt models must use an Amana® brand sub-base (PTSB4**E) or an Amana® brand hard-wire kit (PTPWHWK4).
2. Minimum branch circuit ampacity ratings conform to the National Electric Code; however, local codes should apply.
3. Minimum voltage on 230/208-volt models is 197 volts; maximum is 253 volts.
   Minimum voltage on 265-volt models is 239 volts; maximum is 292 volts.
4. Overcurrent protection for all units without electric heaters is 15 amps. Overcurrent protection on 265-volt models must be cartridge-style time-delay fuses (included and factory-installed on all Amana® brand 265-volt chassis).
5. Heating capacity and efficiency based on unit operation without condensate pump; unit automatically switches to electric heat at approximately 24°F outdoor ambient.
6. Specify two-digit heater kW size to complete model number.
7. R-410A refrigerant used in all systems.
8. All units meet or exceed ASHRAE 90.1 standards.
9. All units less than 250 volts have a Leak Current Detector Interrupter (LCDI) power cord and meet UL 484 standards.
10. Refer to electric heat performance data for total MCA and recommended overcurrent protection.
    Amps and Watts notation refers to compressor only.

CONTRACTOR'S BID SHEET

Furnish and install air-cooled through-the-wall package terminal air conditioners amd heat pumps (assembled in the USA). Units are rated in accordance with the ARI (Air Conditioning & Refrigeration Institute) Standards 310/380-93, CSA (Canadian Standards Association) EEV certification programs and listed by U. L. (Underwriters Laboratories).

RATINGS

Each unit must meet the following specifications:

ARI rating of _____BTUH cooling (and _____ BTUH reverse cycle heating with a COP of _____ at 47° F O.D.)

Electric resistance heat of _____ BTUH. Total Amp draw must be of _____ and _____ Watts at _____ volts.

The unit must remove a minimum of _____ pints of moisture per hour when operated at rating conditions. The EER must be a minimum of _____ EER.

UNIT CHASSIS

Each unit must be slide out design shipped with room cabinet front installed. Unit chassis must have the ability to be installed with 0 clearance from finished floor. An electrical power cord must be included with chassis and installed by the manufacturer to assure proper NEMA 6 or 7 configuration and UL-approved length. Units less than 250 volts must also have a LCDI power cord. Unit must be tested for conformance to ASTME water infiltration specification ASTME 331-86, which ensures no water infiltration when tested at 8" rain per hour at 63 mph wind for 15 minutes.

ROOM CABINET

The monochromatic front of the room cabinet must be able to be field-secured to chassis to inhibit tampering. Filter must be accessible without removing room front. Cabinet depth must not exceed 7⅝" to minimize unit's impact on room space.

COILS

Unit's coils must have rifled copper tubing expanded into rippled-edge louvered aluminum fins. Exterior coil must be of a two-row bent coil design with removable shroud top to allow easy-access for cleaning of the exterior coil.

HEAT PUMPS

Each unit must include a change-over thermistor that senses an outside ambient switch-over temperature as low as 24°F, lock-open refrigerant reversing valve during heat pump operation, temperature-activated defrost drain and automatic emergency heat operation to override the heat pump's change-over thermostat and bring on electric resistance heaters in the event of a sealed system failure. Unit must not operate compressor and electric heaters simultaneously.

COMPRESSOR

The compressor must be hermetically sealed, internally isolated, rotary-type and permanently mounted on rubber isolators. No removal or adjustment of compressor hold-down bolts is to be required during installation.

WARRANTY

The warranty is for Full One Year on the entire unit; Full 2nd through 5th Year on the entire sealed refrigerant system components; Limited Second through Fifth Year on functional parts only.

UNIT DIGITAL CONTROLS

The unit's control must be completely wired and accessible from the top of the chassis. Controls shall be a LED touch-pad design with seven large, easy-to-read and use buttons: Heat – Cool – Off – Fan – Temp+ (plus) – Temp- (minus) and two red seven-segment LED temperature displays. Unit shall have a green status LED to advise owner of operational diagnostic messages. Unit shall have one-button activation via membrane touch-pad. Unit control board shall have an 18-pin low-voltage connector to allow for easy connection to remote wired devices. Unit shall have two serial-port connectors for easy connection to wired or wireless EMS (Energy Management Systems).

Unit must have the ability to easily configure owner-selectable and programmable functions:

- Fan-cycle operation
- Electronic temperature limiting for cooling
- Electronic temperature limiting for heating
- Enhanced dehumidification cooling operation
- Unoccupied 18-hour temperature set-back
- Un-rented temperature set-back
- Multiple unit twinning to one wired thermostat
- Load-shedding operation
- Front-desk on-off or temperature set-back

Unit must be able to connect to approved remote devices:

- Wired thermostat
- Wired door motion sensor
- Wired room motion sensor
- Wired room-to-room transfer fan
- Front Desk Control
- Future RF wireless communications devices

Unit must be able to acquire and display operational temperature data from up to six installed thermistors to include:

- IAT—Indoor air temperature (black)
- ICT—Indoor coil temperature (red)
- IDT—Indoor discharge temperature (yellow)
- OCT—Outdoor coil temperature (blue) (heat pumps & Wireless cooler models)
- OAT— Outdoor Air Temperature (Wireless-ready models only)
- Orange—Miscellaneous thermistor or analog device (optional)

EVAPORATOR/CONDENSER FANS

Direct drive with a permanent, split-capacitor, two-speed indoor motor. Condensate must be directed onto the back and sides of the coil to aid in evaporation and removal.

AIR DISCHARGE

Must be a sloped surface so that obstructions cannot be placed on the unit. Discharge conditioned air can be directed into the room at an angle of 16 or 56 degrees from the vertical position. The discharge grille must be of polycarbonate material to resist bending, cracking, rusting and corrosion.

New installations typically require a minimum of WS900E wall sleeve and an outdoor grille.

WALL SLEEVES (WS900E)

The wall sleeve must be industry-accepted dimensions: 14⅛" depth x 42" width x 16 1/16" height and constructed of G90 HDG galvanized steel with a baked corrosion-inhibiting urethane primer and baked-polyester topcoat enamel. Sleeve must be insulated and shipped with a weather resistant rear closure panel installed.

OUTDOOR GRILLES

Outdoor grille must be architecturally extruded, louvered aluminum (AGK01*B), one-piece polymer-blend injection molded louver (PGK01*B) or standard stamped aluminum (SGK**B). All other grilles must be submitted to the PTAC manufacturer for feasibility, airflow characteristics and compliance with UL regulations, where necessary.

The optional accessories listed below perform specific functions required in some installations.

CONDENSATE DRAIN KIT (DK900D)

Attaches to the bottom of the wall sleeve for directional-controlled internal or external disposal of condensate, defrost or rain water.

SUB-BASE KIT (PTSB***E)

Necessary for UL listing requirements for 265V units (Hard Wire Kit may be substituted for Sub-base kit). Optional for 230/208V units. Must be pre-wired to facilitate field-electrical connections and include an NEMA 6 or 7 configuration electrical receptacle. It must have two leveling screws for sleeve support and accurate unit leveling during installation. Locations for field installation of physical disconnect switches, cartridge-style fuse holders and circuit breakers must be provided. Side-skirts must be provided with sub-bases. *(PTSB000E Non-Electrical Sub-base available.)*

POWER VENT & DAMPER

Must be provided to maximize ventilation air intake to up to approximately 95 CFM. Power vent must be off and damper door closed when unit fan is de-energized.

FUSE HOLDER (INCLUDED IN 265V CHASSIS)

Must be installed either in the unit or the sub-base and must match the electrical requirements of the chassis.

SECURITY KEY LOCKS (KL03E)

Must be installed to prevent tampering of the unit controls. Unit room cabinet must also be secured to the chassis with field supplied screws. UL-approved for institutional use only.

DISCONNECT SWITCH

Power disconnect switch must be installed in sub-base for use as a physical disconnect, where required by local codes.

Contractor's Bid Sheet (cont.)

Duct Kits (MDK01E, EDK02B, TDK02B, PTDK01E, DDK01E)
Three kits must be supplied to provide ducted, conditioned air into a second room: a main duct kit, an extension duct kit and a terminal duct kit.

Hydronic Heat Kit
Is required for heating functions instead of electric resistance heaters. Unit must retain complete service access with the kit installed. Proper water or steam valves must be used.

Condensate Removal Pump (Heat Pumps only)
Must be installed to assist in removing the condensate developed by the heat pump operation and transfer it to the indoor coil to dissipate into the room, adding humidity to the room.

Circuit Breaker Kit
Must be installed in sub-base to provide overcurrent protection for proper 230/208V amperage. Can also be used as a physical disconnect where local codes permit for 230/208 voltage.

Hard Wire Kit
Must be used to permanently wire chassis for hard wire purposes. (For 265V units, Hard Wire Kit may be substituted with Sub-base Kit.)

Thermostats
A manufacturer-approved manual, auto changeover or programmable traditionally wired thermostat must be installed to provide full remote operation of the chassis. A Remote Escutcheon Kit must be used to indicate remote operation.

Monthly Maintenance

Intake Air Filters
It is extremely important to clean the inlet air filters once a month (or more often if operated in dusty or dirty locations or conditions) to properly maintain the operational performance of the PTAC unit. The two intake air filters (constructed of durable polypropylene) can be easily inserted into the cabinet front using the cabinet filter guides. Before cleaning the intake filters, turn the unit off by setting the mode switch to the OFF position. Filters should be cleaned as required. The following procedure is used to remove the intake filters:

1. Facing the unit, pull up on the filter handles located at the front top of the unit.
2. Pull each filter upward and remove.
3. Clean filters with vacuum or with running water. Reverse this procedure to reinstall the filters.

Note: Accessory filter kits are available from your sales person. All filters are permanent and cleanable. Consult your I&O Manual for other monthly cleaning instructions.

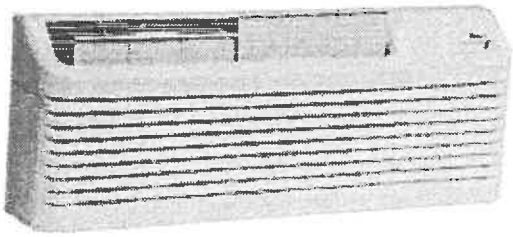

Spare Filters
Helps keep dirt and lint out of the air and off the coil, thus increasing the unit's efficiency. Amana® brand filters are easy to remove, wash and replace.

FK10A	10-pack - A Series
FK10B	10-pack - B, C & D Series
FK10E	10-pack - E Series (requires 2 filters per change.)

Replacement Charcoal Filter Kit
Absorbs airborne odors caused by cigarette, pipe or cigar smoke and odors caused by mold, mildew, etc. Filters are made of polyester fibers coated with activated charcoal and are individually wrapped. These filters are permanent and can be washed or cleaned. Call your Amana® brand PTAC sales person for details. 10 filters per pack.

CFK10A	10-pack - A Series (R-22)
CFK10B	10-pack - B, C & D Series (R-22)

Amana® is a trademark of Maytag Corporation or its related companies and used under license to Goodman Company, L.P. All rights reserved. Our continuing commitment to quality products may mean a change in specifications without notice. © 2014 • Goodman Company, L.P. • Houston, Texas • Printed in the USA.

PTAC Wall Sleeve
Installation Instructions

The wall sleeve must be installed before the air conditioner or heat pump chassis can be set in place. Read the instructions thoroughly before proceeding.

When 230/208 volt units are to be installed, the power supply may be either cord connected or permanent wiring. Permanent wiring may be done through the hard wire junction box, or the accessory subbase.

When 265 volt units are to be installed, the power supply must be permanent wiring. Permanent wiring may be done through the accessory hard wire junction box, or the accessory subbase. **An exposed cord connection on 265 volt units is not permitted.**

The subbase accessory includes leveling legs. If added wall sleeve support is required and the subbase is not to be used an accessory leveling leg kit may be installed.

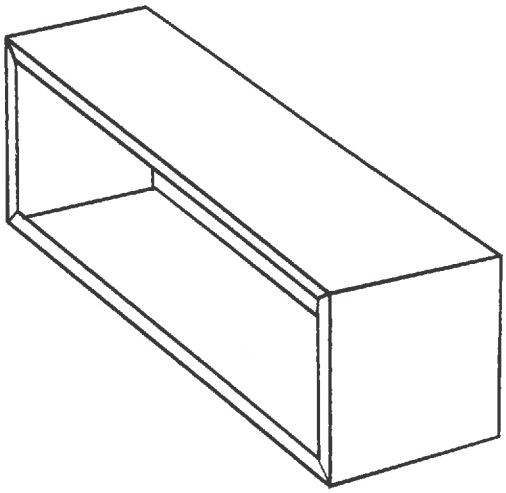

Made in USA

Contents

KIT ACCESSORIES 2
Drain Kit 2
Subbase, Leveling Legs, Main Duct, and Hydronic Heat Kits 2
PRE-INSTALLATION CONSIDERATIONS 3
Outdoor Enclosure Panel Removal 3
WALL SLEEVE INSTALLATION 4

⚠ RECOGNIZE THIS SYMBOL AS A SAFETY PRECAUTION

ATTENTION INSTALLING PERSONNEL

As a professional installer you have an obligation to know the product better than the customer. This includes all safety precautions and related items.

Prior to actual installation, thoroughly familiarize yourself with this Instruction Manual. Pay special attention to all safety warnings. Often during installation or repair it is possible to place yourself in a position which is more hazardous than when the unit is in operation.

Remember, it is **your** responsibility to install the product safely and to know it well enough to be able to instruct a customer in its safe use.

Safety is a matter of common sense...a matter of thinking before acting. Most dealers have a list of specific good safety practices...follow them.

The precautions listed in this Installation Manual are intended as supplemental to existing practices. However, if there is a direct conflict between existing practices and the content of this manual, the precautions listed here take precedence.

Part No. A3495105
Printed in USA

August 2005

KIT ACCESSORIES

Drain Kit

An indoor/outdoor drain kit is available as an accessory item. When a drain kit is to be installed, do so before installing the wall sleeve in the wall. See the drain kit for actual installation instructions.

Subbase, Leveling Legs, Main Duct, and Hydronic Heat Kits

Installation of these kits requires drilling of mounting holes on both sides of the wall sleeve. The minimum required clearance distance between the wall sleeve and wall is shown in Table 1. If the distance between wall sleeve and wall will be at or near the minimum clearance distance, mount these kits on the sleeve before installing the sleeve in the wall. The kit installation instructions are included with the accessory kits.

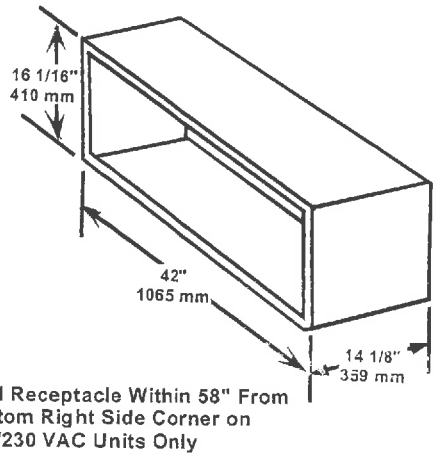

Figure 1 - Wall Sleeve Dimensions

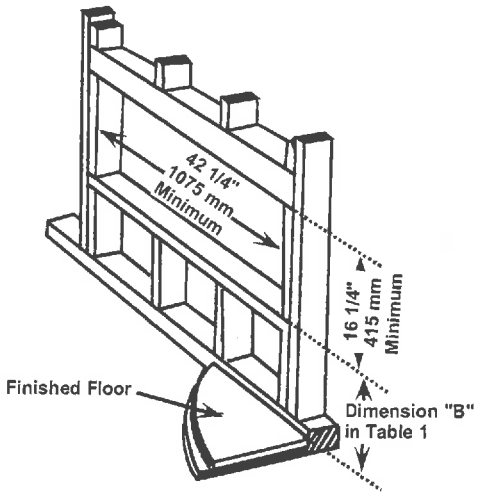

Figure 2 - Minimum Wall Opening Dimensions

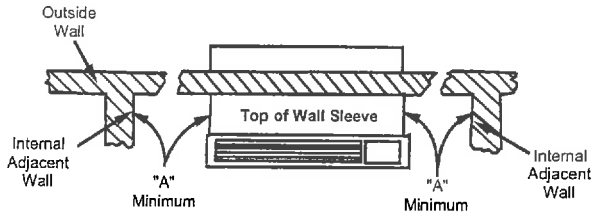

Allow Front Clearance (See Table 1)

Figure 3 - Minimum Unit Clearances

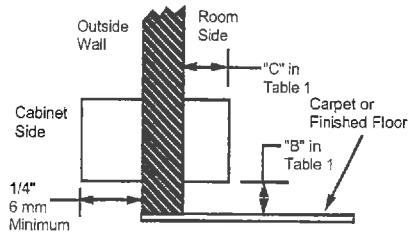

Figure 4 - Minimum Interior and Exterior

MINIMUM CLEARANCES AND PROJECTIONS						
OPTION	MINIMUM CLEARANCES				MINIMUM PROJECTION	
	A (Figure 2)		B (Figure 3)		C (Figure 4)	
	Inches	mm	Inches	mm	Inches	mm
Wall Sleeve Only	3	75	0	0	0	0
Subbase Kit	3	75	3 1/4	85	2 3/4	70
Leveling Legs Kit	3	75	3	75	2	50
Duct Kit	3	75	0	0	2 3/8	35
Hydronic Heat Kit "A Series"	9	230	0 to 3 1/4[3]	0 to 85[3]	3[2]	75[2]
Hydronic Heat Kit "J Series"	6	150	0	0	2 1/2	65
Drain Kit	3	75	'0[1]	'0[1]	0	0
Hardwire Kit	3	75	1 1/4	30	0	0

[1] If inside mounted then B = 1 1/2 inches (40 mm)

[2] To achieve a flush fit between the hydronic front and the finished wall, Dimension "C" must be between 3" and 3 1/8". If this dimension is more than 3 1/8" there will be a gap between the front and the wall. This gap could permit occupant access to hydronic lines or other dangerous parts.

[3] This dimension can be from 0" to 3-1/4", but cannot exceed 3-1/4". If this dimension exceeds 3-1/4", the skirt around the front will not reach the floor.

Table 1

PRE-INSTALLATION CONSIDERATIONS

Before proceeding with the sleeve installation, ensure the following guidelines for locating the wall opening and sleeve are met:

- The wall opening must be the correct size. See Figure 1 for wall sleeve dimensions and Figure 2 for minimum wall opening size.
- The wall sleeve will need to be installed with minimum clearances to the floor and adjacent walls. Minimum projections of the sleeve into and out of the room will also have to be met. See Figures 3 and 4 as well as Table 1 for details.
- If installed in a concrete or masonry wall, a lintel must be provided in the wall opening for support. **Do not use the wall sleeve as a lintel.** See Figure 5 for a typical lintel construction.
- When installed in the opening, the wall sleeve must be horizontally level from side to side and pitched (one quarter bubble in the sight glass) to the outside. DO NOT SLOPE THE WALL SLEEVE TOWARD THE ROOM. (Figure 5)
- The installer must determine and supply the mounting bolts and/or screws to attach the wall sleeve to the sides of the wall opening. Make sure the wall opening is adequate for strong support.
- The installer must provide adequate sealing and insulation around the sleeve after it is installed. See Figure 6 for one of many types of constructions.
- If used, a 208/230-volt wall receptacle must be located within 58 inches of the lower right sleeve corner. Extension cords must not be used with the unit. See the note on Figure 1.
- For installations in walls deeper than 13-7/8 inches, special care is necessary to prevent problems with rain water, condensate drainage and intake/discharge air. Under these circumstances, careful job site analysis and precautions are required. You must consult with your Sales Representative and receive approval before attempting such installations.

Outdoor Enclosure Panel Removal

The sleeve stiffener must be taken out before the enclosure panel can be removed from the sleeve.

1. Remove the zig-zag folded cardboard sleeve stiffener (Figure 7).
2. Remove the rear closure panel by folding the four flaps as indicated in Figure 8.
3. Grasping the top and bottom flanges of the rear closure panel as shown in Figure 9, the entire panel is pulled out diagonally from one side.

Install the wall sleeve condenser air grille by using the screws and holes provided. (See the Installation Instructions provided for the grille kits.)

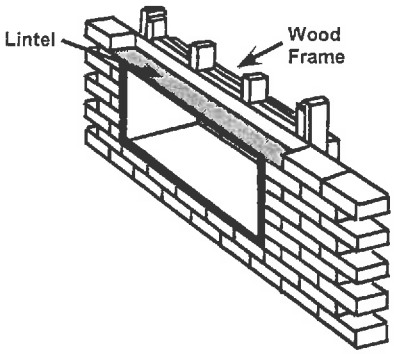

Figure 5 - Framing with Lintel

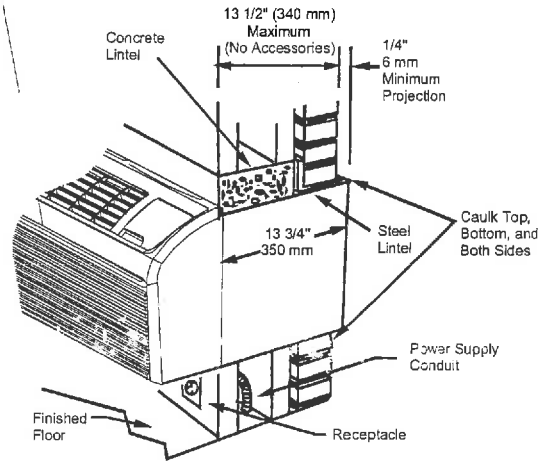

Figure 6 - Block and Brick Veneer Installation

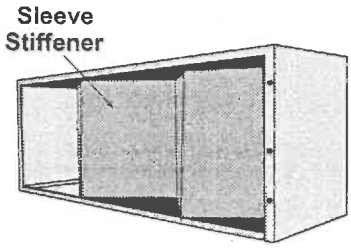

Figure 7- Sleeve Stiffener Remova

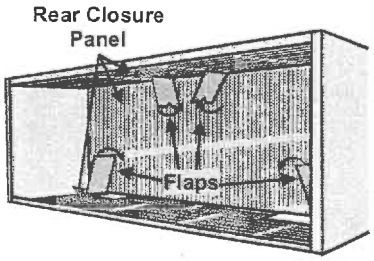

Figure 8 - Rear Enclosure Panel

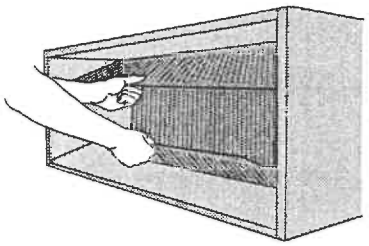

Figure 9 - Panel Removal

WALL SLEEVE INSTALLATION

After the wall opening is checked and approved for location, size, and clearances, complete the following to install the wall sleeve.

1. Remove the outside enclosure panel from the wall sleeve.
2. Slide the wall sleeve into the wall opening. Do not distort the cabinet shape to fit the wall opening; the unit chassis must fit snugly and uniformly into the wall sleeve.
3. Locate the sleeve within the range of minimum projections, as shown in Figures 3 and 4, so both sides are at least the minimum projection from the wall.
4. Check the level of the wall sleeve. For proper drainage, the sleeve should be level from side to side and one-quarter bubble in the sight glass sloping to the outside.
5. Two holes will need to be drilled in both sides of the wall sleeve for mounting into the wall. Drill holes of proper size and in the proper location so the screws will engage into strong supporting members of the wall. DO NOT DRILL THROUGH BOTTOM OF SLEEVE. Figure 10 shows possible fastening methods.

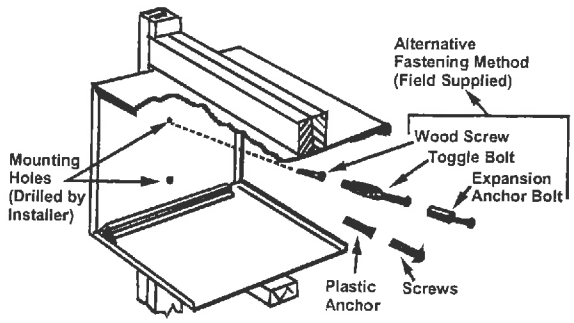

Figure 10 - Wall Sleeve Attachment to Opening

6. Check the level of the wall sleeve and adjust if necessary.
7. Caulk or seal around the outside of the entire sleeve.
8. If the unit chassis will not be installed immediately, replace the enclosure panel on the outside opening of the sleeve. This will prevent weather damage to the building interior.
9. Recycle or dispose of packaging materials per local codes.

LUMINAIRES

334 Pleasant St, Belmont, MA
Fixture A

A

PRODUCT TECHNICAL DATA SHEET

HCI LIGHTING
HERITAGE CASTING & IRONWORKS LTD.

F100-LED SERIES

SPECIFICATIONS

Housing
Made from heavy duty cast aluminum to withstand harsh weather.

Hardware
All exposed hardware is made of durable stainless steel, with industrial strength seals.

Interior Design & Optical
Energy efficient LED driver is mounted on a removable plate, with quick disconnect wiring to allow easy driver maintenance.
L70 at 50,000 hours with CRI≥70.

Exterior Design & Finish
Luminaire is designed to fit post top mounting or pendant mounting with our ornamental arms and poles, and is suitable for wet locations.
Finish is electrostatically applied with thermoset polyester powder-coat.

SIZES

	length	width	height	weight	tenon size	EPA
Large	16.5"	16.5"	42"	24 lbs	3"(W) x 4"(L)	1.45 ft²
Small	14"	14"	36"	22 lbs	3"(W) x 4"(L)	1.05 ft²

PHOTOMETRICS

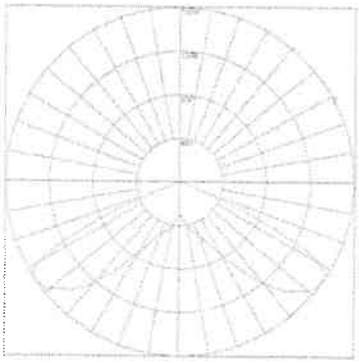

SAMPLE ILLUSTRATION
IES type V, medium

polar graph

ISO footcandle

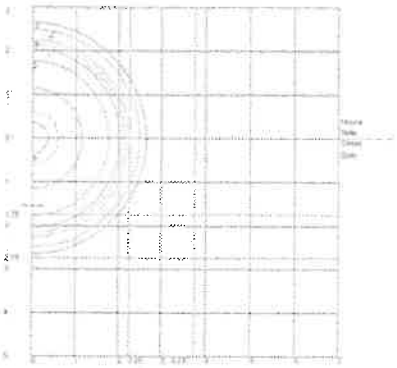

PRODUCT	FITTER	DIFFUSER TYPE	WATTAGE	CCT	VOLTAGE	OPTICS	OPTIONS	FINIALS	COLOR
F100-L F100-S	A B C D E F G H I J K L M N T U	FAC FROSTED ACRYLIC FPC FROSTED POLYCARBONATE WAC WHITE ACRYLIC	LED 35W 50W 55W 70W 80W 90W 100W CUSTOM	3000K 4000K 5000K 6000K ±10% VARIANCE	120V-277V STEP DOWN TRANSFORMER 347V 480V	IES TYPE II (2) III (3) IV (4) V (5)	DIM DIMMING CONTROL FUS INTERNAL FUSING PCB BUTTON TYPE PHOTOCELL HSS HOUSE SIDE SHIELD TWL TWIST LOCK SYSTEM	FA FB FC FD FE FF FG FH FI FJ NONE	STANDARD RAL 6005 GREEN 7012 GREY 8019 BRONZE 9011 BLACK 9016 WHITE *TEXTURE AVAILABLE CUSTOM RAL

Product ordering sample F100 - L - A - FAC - LED35W - 3000K - 120-277V - TYPE II - DIM - FA - RAL9011 BLACK

© 2015 HCI LIGHTING. We reserve the rights to change the product and its information without notice

334 Pleasant St, Belmont, MA

Fixture A

A

Please Note: Fabrication will not begin until this drawing is approved, signed and returned to HCI

- ☐ APPROVED
- ☐ APPROVED AS NOTED
- ☐ REJECTED
- ☐ REVISE AND RESUBMIT

By _____

Date _____

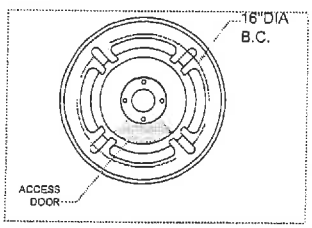

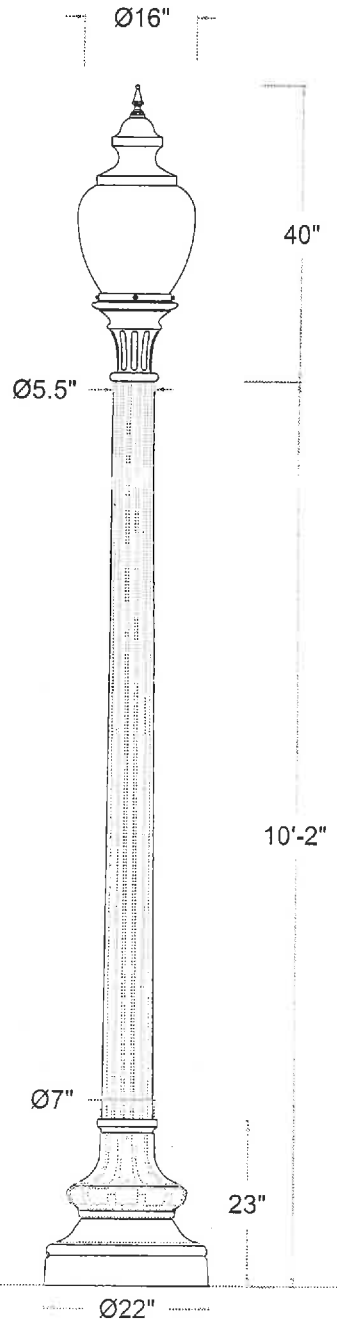

(C) 2001 HCI (Heritage Casting & Ironworks). Illustrations are copyrighted. Unauthorized reproduction prohibited.
In an ongoing effort to improve quality/design, Heritage reserves the right to modifity specyfications without notice.

Approval Drawing

Light Std: F100-L-P407-755-10

Diffuser Type: Frosted

Diffuser Material: Polycarbonate U.V. stabilized.

Optical System: Prismatic, heat resistant borosilicate glass refractor, IES Type III.

Diffuser Holder Material: Cast Aluminum. Diffuseris attached with stainless steel hardware.

Ballast: HPS high power factor mounted on removable plate. A quick disconnect wiring system allows for fast easy ballast maintenance.

Wattage - 100W HPS
Voltage - 120V
Socket -Medium (4KV).

Photocontrol: None.

Pole: Astm 513, 11 gauge fluted steel, with 16 flutes. Theshaft shall taper from 7" dia at the top of base to 5.5"dia at the top.

Base Cover: One-piece ASTM-65-45-0 Ductile Cast Iron attached to pole with four stainless steel bolts.

Anchor Bolts: 4 galvanized 3/4" (19mm) x 24" (610mm) long " L" type. Anchor bolts and metal template supplied by HCI.

Finish: Electrostatically applied, thermoset polyester powder-coat finish with XL4 four part corrosion inhibiting process.

Color: PLEASE SPECIFY

Date: May 03, 2002 Drawing No: 4075
Model: F100-L-F4-FPC-100HPS-120V-BR-L3-
-P407-755-10-Color
Project: Urbandale Streetscape

Please Note: Fabrication will not begin until this drawing is approved, signed and returned to HCI

HCI
Heritage Casting & Ironworks
1280 Fewster Drive, Mississauga, Ontario, Canada L4W 1A4
Tel: (905) 238-2648 Fax: (905) 238-9060
Toll Free Canada & USA 1-800-267-3175
E: sales@hcilighting.com WEB: www.hcilighting.com

Job: 334 Pleasant St, Belmont, MA B
Type: B
Notes:

BOLLARD

BRM800 Dome Top Bollards

Philips Gardco's bollard family features the BRM800 Dome Top bollard. This disctinctive bollard provides uniform illumination, superior spacings and remarkable brightness control. Rugged extruded and cast construction with silicone seals and gasketing assure years of trouble free service. Each BRM800 utilizes 35w through 100w high intensity discharge lamps.

PREFIX	HEIGHT	WATTAGE	VOLTAGE	FINISH	OPTIONS
BRM800	36			BRP	

Enter the order code into the appropriate box above. Note: Philips Gardco reserves the right to refuse a configuration. Not all combinations and configurations are valid. Refer to notes below for exclusions and limitations. For questions or concerns, please consult the factory.

PREFIX

BRM800 Dome Top Bollard

HEIGHT / WATTAGE

HEIGHT			
42"	50MH[1]	35HPS[2]	INC[2] 100w maximum A19
36"	70MH	50HPS[1]	
30"	100MH	70HPS	
24"		100HPS	

MH Metal Halide (Pulse Start)
HPS High Pressure Sodium
INC Incandescent

1. 120 or 277V only.
2. 120V only.
3. Specify single voltage.

VOLTAGE

120
208
240
277
QUAD

FINISH

BRP	Bronze Paint	OC	Optional Color Paint Specify RAL designation as ex: OC-RAL7024.
BLP	Black Paint		
WP	White Paint		
NP	Natural Aluminum Paint	SC	Special Color Paint Specify. Must supply color chip.
VP	Verde Green Paint		

OPTIONS

F[3]	Fusing
SHD	Internal 180° Shield
DUP	Duplex Receptacle weathertight, flush-mounted in lower housing
GFCI	GFCI Receptacle weathertight, flush-mounted in lower housing

PHILIPS GARDCO

BOLLARD

BRM800 Dome Top Bollards

SPECIFICATIONS

GENERAL: Each Philips Gardco BRM800 is a bollard luminaire utilizing 35w through 100w high intensity discharge lamps. Luminaire features a precision anodized aluminum reflector system which provides low glare, uniform illumination and wide spacing. Units are totally sealed and gasketed preventing intrusion of moisture, dust and insects into the optical or electrical chambers.

HOUSING: Dome upper housing is diecast aluminum and bottom cylindrical housing is .125"(.318 cm) high strength 6063-T5 extruded aluminum. Bottom section has a welded-in cast ring for attachment to base assembly with four (4) hex head set screws.

LENS: The lens is .250" (.635 cm) clear virgin acrylic positioned between upper and lower housing sections. Silicone gasket completely seals unit and permits thermal expansion.

OPTICAL SYSTEM: Electrochemically anodized die-formed aluminum reflector provides efficient illumination and brightness control. Hammertoning of reflector assures clean, unstriated beam pattern.

SOCKET: Medium base pulse-rated lampholder is glazed porcelain with nickel plated reinforced screw shell and spring loaded contact.

ANCHORAGE: Base assembly consists of a cast aluminum platform and ballast mounting bracket. Assembly is secured and leveled to the mounting foundation with four (4) 3/8" X 8" X 1 1/2"(.953 cm x 20.32 cm x 3.81 cm) anchor bolts on a 4 3/4" (12.07 cm) bolt circle. Ballast is prewired with quick electrical disconnects and mounting bracket is secured with two (2) Phillips head screws for ease of installation and servicing.

ELECTRICAL: Each high power factor ballast is the separate component type, capable of providing reliable lamp starting down to -20°F/-29°C. Component-to-component wiring within the luminaire will carry no more than 80% of rated current and is listed by UL for use at 600 VAC at 150°C or higher. Plug disconnects are listed by UL for use at 600 VAC, 15A or higher.

FINISH: Each luminaire receives a fade and abrasion resistant, electrostatically applied, thermally cured textured polyester powdercoat finish.

WARRANTY: 5 year limited warranty. See philips.com/warranties for complete details and exclusions.

DIMENSIONS

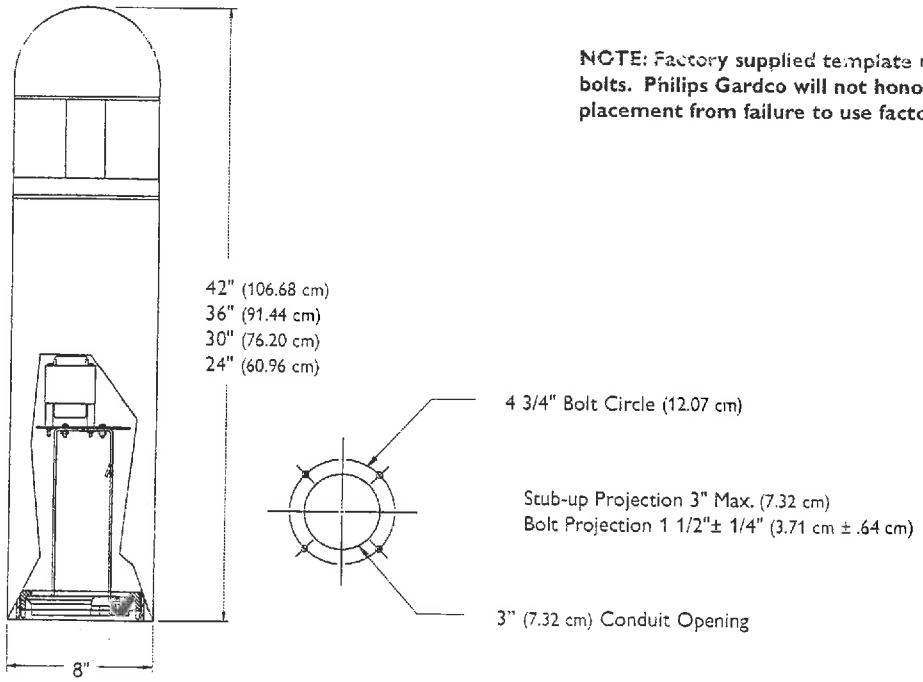

NOTE: Factory supplied template must be used when setting anchor bolts. Philips Gardco will not honor any claim for incorrect anchorage placement from failure to use factory supplied templates.

©2015 Koninklijke Philips N.V. All rights reserved.
Philips reserves the right to make changes in specifications and/or to discontinue any product at any time without notice or obligation and will not be liable for any consequences resulting from the use of this publication.
philips.com/luminaires

Philips Lighting, North America Corporation
200 Franklin Square Drive, Somerset, NJ 08873
Tel. 855-486-2216

Philips Lighting Canada Ltd.
281 Hillmount Rd, Markham, ON, Canada L6C 2S3
Tel. 800-668-9008

Job: 334 Pleasant St, Belmont MA C
Type: C
Notes:

110 Line LED

111 Mini Sconce LED

Philips Gardco 111 LED mini sconce luminaires are compact in size, perfect for low mounting height wall mount applications. 111 LED luminaires are designed to integrate naturally to wall surfaces. 111 LED luminaires are available with three (3) different distribution patterns, providing full cutoff performance (in the normal downlight position) and featuring LED arrays. Luminaires provide performance excellence and advanced Philips Gardco LED thermal management technology. High performance Class 1 LED systems offer potential energy savings of 50 % or more compared to HID systems. 111 LED luminaires are also available with 0-10V Dimming.

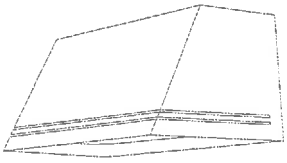

PREFIX	DISTRIBUTION	LED WATTAGE	LED SELECTION	VOLTAGE	FINISH	OPTIONS
111L	2	20LA	WW		BRP	

Enter the order code into the appropriate box above. Note: Philips Gardco reserves the right to refuse a configuration. Not all combinations and configurations are valid. Refer to notes below for exclusions and limitations. For questions or concerns, please consult the factory.

PREFIX

111L	Trapezoidal Wedge LED - Constant Wattage / Full Light Output
111L-DIM	Trapezoidal Wedge LED - 0 - 10V Dimming *(Control system by others.)*

See page 3 for more detailed luminaire configuration information.

DISTRIBUTION

2	Type II	*Wide Throw Optic, featuring Maximized Lateral Throw*
3	Type III	*Preferred Wide Throw Optic, featuring Improved Forward Throw*
4	Type IV	*Maximized Forward Throw Optic*

LED WATTAGE AND LUMEN VALUES

Ordering Code	Average System Watts[1]	LED Current (mA)	LED Selection	Luminaire Initial Absolute Lumens[2]			Basis of Lumen Data
				TYPE 2	TYPE 3	TYPE 4	
20LA	18	350	NW	1,683	1,791	1,701	*Photometric tests performed in compliance with IESNA LM-79.*
30LA	28	530	NW	2,432	2,613	2,467	
40LA	38	700	NW	3,122	3,354	3,118	

1. *Wattage may vary by +/- 8% due to LED manufacturer forward volt specification and ambient temperature. Wattage shown is average for 120V through 277V input. Actual wattage may vary by an additional +/- 10% due to actual input voltage.*
2. *Tests are in process for luminaires with the DL option. Contact Gardco.applications@philips.com if any approximate estimates are required for design purposes.*

LED SELECTION

CW	Cool White - 5700°K - 75 CRI
NW	Neutral White - 4000°K - 70 CRI
WW	Warm White - 3000°K - 70 CRI

VOLTAGE

UNIV	120V through 277V, 50hz or 60hz
120	
208	
240	
277	

© 2014 Koninklijke Philips N.V. All rights reserved.

PHILIPS GARDCO

C

110 Line LED

111 Mini Sconce LED

FINISH

BRP	Bronze Paint
BLP	Black Paint
WP	White Paint
NP	Natural Aluminum Paint
BGP	Beige Paint
OC	Optional Color Paint *Specify Optional Color or RAL ex: OC-LGP or OC-RAL7024.*
SC	Special Paint *Specify. Must supply color chip.*

OPTIONS

F[3]	Fusing
PCB[3]	Button Type Photocontrol
DL	Diffusing Lens *(reduces performance significantly)*
WS[4]	Wall Mounted Box for Surface Conduit

3. Provide specific input voltage.
4. Rear entry permitted.

DIMENSIONS

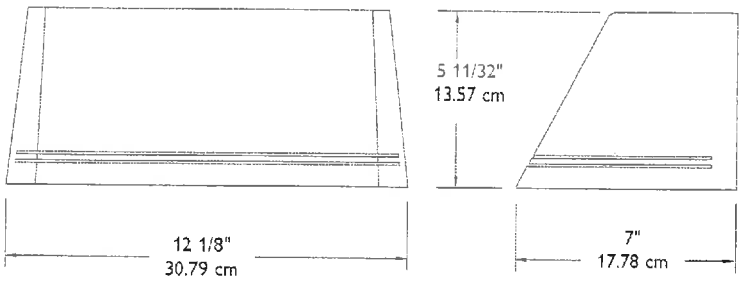

Mounting Plate

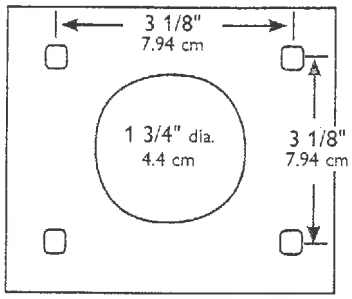

Mounting Bolt Pattern

Note: Mounting plate center is located in the center of the luminaire width and 2.38" (6.03cm) above the luminaire bottom (lens down position). Splices must be made in the j-box (by others). Mounting plate must be secured by max. 5/16" (.79cm) diameter bolts (by others) structurally to the wall.

© 2014 Koninklijke Philips N.V. All rights reserved.

110 Line LED C

111 Mini Sconce LED

LUMINAIRE CONFIGURATION INFORMATION

111L: Philips Gardco mini sconce LED providing constant wattage and constant light output when power to the luminaire is energized.

111L-DIM: Philips Gardco mini sconce LED provided with 0 -10V dimming for connection to a control system provided by others.

SPECIFICATIONS

GENERAL: Philips Gardco 111 LED Trapezoidal Wedge high performance sconce luminaires arePhilips Gardco 111 LED mini sconce luminaires feature a compact size and are designed to integrate naturally to wall surfaces. 111 LED luminaires are available with three (3) different distribution patterns, providing full cutoff performance (in the normal downlight position) and featuring LED arrays. Luminaires provide performance excellence and advanced Philips Gardco LED thermal management technology. High performance Class 1 LED systems offer potential energy savings of 50 % or more compared to HID systems. 111 LED luminaires are also available with 0-10V Dimming. Surge protector standard. 10KA per AN SI/IEEE C62.41.2.

THERMAL MANAGEMENT: Philips Gardco 111 LED luminaires utilize extruded aluminum integral thermal radiation fins to provide the excellent thermal management so critical to long LED system life.

LED RELIABILITY:

PREDICTED LUMEN DEPRECIATION DATA		
Ambient Temperature °C	LED Voltage / Drive mA	L_{70} Hours[5]
40 °C	20LA / 350 mA	225,000
	30LA / 530 mA	156,000
	40LA / 700 mA	110,000

5. Predicted performance derived from LED manufacturer's data and engineering design estimates, based on IESNA LM-80 methodology. Actual experience may vary due to field application conditions. L_{70} is the predicted time when LED performance depreciates to 70% of initial lumen output.

OPTICAL SYSTEMS: Philips Gardco 111 LED luminaires utilize lensed LED arrays set to achieve IES Type II, Type III, and Type IV distributions. Individual LED arrays are replaceable. Luminaires feature high performance Class 1 LED systems.

HOUSING: Housings are die cast aluminum. A memory retentive gasket seals the housing to the door frame to exclude moisture, dust, insects and pollutants from the optical system. A black, die cast ribbed backplate dissipates heat for longer system life.

DOOR FRAME: A single-piece die cast aluminum door frame integrates to the housing form. The door frame is hinged closed and secured to the housing with captive stainless steel fasteners. The heat and impact resistant 1/8" (.32cm) tempered glass lens and one-piece gasket are mechanically secured to the door frame with galvanized steel retainers. A clear tempered glass lens is included. A diffuse lens is available as an option.

IP RATING: Luminaires are rated IP66.

FINISH: Each standard color luminaire receives a fade and abrasion resistant, electrostatically applied, thermally cured, triglycidal isocyanurate (TGIC) textured polyester powdercoat finish. Standard colors are as listed. Consult factory for specs on custom colors.

LABELS: All luminaires bear UL or CUL (where applicable) labels. Lens down application is Wet Location and lens up is Damp Location.

WARRANTY: Philips Gardco LED luminaires feature a 5 year limited warranty, including a 5 year limited warranty covering the LED arrays and LED drivers. See Warranty Information on www.sitelighting.com for complete details and exclusions.

FULL CUTOFF PERFORMANCE: Full cutoff performance means a luminaire distribution where zero candela intensity occurs at an angle at or above 90° above nadir . Additionally, the candela per 1000 lamp lumens does not numerically exceed 100 (10 percent) at a vertical angle of 80° above nadir. This applies to all lateral angles around the luminaire.

© 2014 Koninklijke Philips N.V. All rights reserved.

Philips reserves the right to make changes in specifications and/or to discontinue any product at any time without notice or obligation and will not be liable for any consequences resulting from the use of this publication.

Philips Lighting
North America Corporation
200 Franklin Square Drive
Somerset, NJ 08873
Tel. 855-486-2216

Imported by: Philips Lighting,
A division of Philips Electronics Ltd.
281 Hillmount Rd,
Markham, ON, Canada L6C 2S3
Tel. 800-668-9008

334 Pleasant St, Belmont, MA
Fixture D

D

TANGO lighting

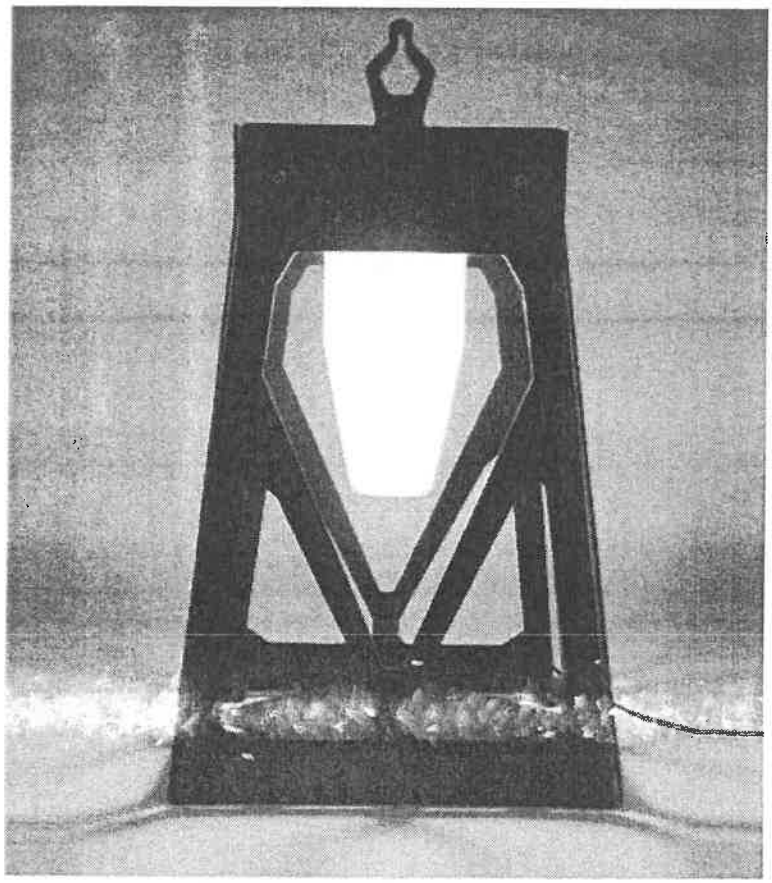

Charles Big Floor

Product Name

Charles Big Floor

Dimensions

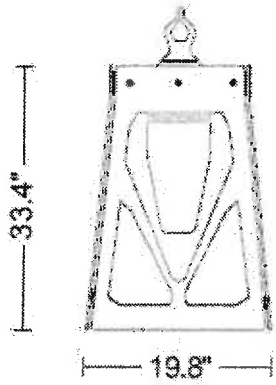

Light Source

1 x 23W Max E26
medium base
low energy

Type D

Project 334 Pleasant St, Belmont, MA

Specifier

Finishes

White
Bronze
Aluminum.

Tango Lighting Inc.
2601 SW 3rd. Ave. Unit # 4
Ft. Lauderdale, FL 33315

Toll Free: 888-748-2646
Telephone: 954-767-0100
Fax: 954-767-0103
info@tangolighting.com

© 2013 Tango Lighting. All rights reserved. Created and maintained by WSI